GEL-5261

52-Port L2 Managed Gigabit Switch, 4 x SFP

CLI Reference Guide

V2.0

Digital Data Communications Asia Co., Ltd.

http://www.level1.com

CLI Reference Guide

GEL-5261

Layer Layer 3 Lite Gigabit Ethernet Switch
with 48 10/100/1000BASE-T (RJ-45) Ports
and 4 Gigabit SFP Ports

E022022-CS-R02

How to Use This Guide

This guide includes detailed information on the switch software, including how to operate and use the management functions of the switch. To deploy this switch effectively and ensure trouble-free operation, you should first read the relevant sections in this guide so that you are familiar with all of its software features.

Who Should Read This Guide?

This guide is for network administrators who are responsible for operating and maintaining network equipment. The guide assumes a basic working knowledge of LANs (Local Area Networks), the Internet Protocol (IP), and Simple Network Management Protocol (SNMP).

How This Guide is Organized

This guide describes the switch's command line interface (CLI). For more detailed information on the switch's key features or information about the web browser management interface refer to the *Web Management Guide*.

The guide includes these sections:

- Section I "Getting Started" — Includes information on initial configuration.
- Section II "Command Line Interface" — Includes all management options available through the CLI.
- Section III "Appendices" — Includes information on troubleshooting switch management access.

Related Documentation

This guide focuses on switch software configuration through the CLI.

For information on how to manage the switch through the Web management interface, see the following guide:

Web Management Guide

For information on how to install the switch, see the following guide:

Quick Start Guide

For all safety information and regulatory statements, see the following documents:

Quick Start Guide
Safety and Regulatory Information

Conventions

The following conventions are used throughout this guide to show information:

Note: Emphasizes important information or calls your attention to related features or instructions.

Caution: Alerts you to a potential hazard that could cause loss of data, or damage the system or equipment.

Revision History

This section summarizes the changes in each revision of this guide.

Revision	*Date*	*Change Description*
v1.1.11.171	02/2022	Removed references to GVRP.
v1.1.10a.171	06/2017	Initial release

Contents

How to Use This Guide 3

Contents 5

Tables 31

Section I Getting Started 37

1 Initial Switch Configuration 39

Connecting to the Switch 39

Configuration Options 39

Connecting to the Console Port 40

Logging Onto the Command Line Interface 41

Setting Passwords 41

Remote Connections 42

Configuring the Switch for Remote Management 42

Using the Network Interface 42

Setting an IP Address 42

Enabling SNMP Management Access 48

Managing System Files 50

Upgrading the Operation Code 51

Saving or Restoring Configuration Settings 51

Automatic Installation of Operation Code and Configuration Settings 53

Downloading Operation Code from a File Server 53

Specifying a DHCP Client Identifier 56

Downloading a Configuration File and Other Parameters from a DHCP Server 57

Setting the System Clock 59

Setting the Time Manually 59

Configuring SNTP 60

Configuring NTP 60

Section II Command Line Interface 63

2 Using the Command Line Interface 65

Accessing the CLI 65

Console Connection 65

Telnet Connection 66

Entering Commands 67

Keywords and Arguments 67

Minimum Abbreviation 67

Command Completion 67

Getting Help on Commands 68

Partial Keyword Lookup 69

Negating the Effect of Commands 70

Using Command History 70

Understanding Command Modes 70

Exec Commands 70

Configuration Commands 71

Command Line Processing 73

Showing Status Information 73

CLI Command Groups 74

3 General Commands 77

prompt 77

reload (Global Configuration) 78

enable 79

quit 80

show history 80

configure 81

disable 82

reload (Privileged Exec) 82

show reload 83

end 83

exit 83

4 System Management Commands 85

Device Designation 85
hostname 86
System Status 86
show access-list tcam-utilization 87
show license file 88
show memory 89
show process cpu 89
show process cpu guard 90
show process cpu task 91
show running-config 92
show startup-config 94
show system 94
show tech-support 95
show users 96
show version 97
show watchdog 98
watchdog software 98
Fan Control 98
fan-speed force-full 98
Frame Size 99
jumbo frame 99
File Management 100
General Commands 101
boot system 101
copy 102
delete 106
dir 107
whichboot 108
Automatic Code Upgrade Commands 108
upgrade opcode auto 108
upgrade opcode path 110
upgrade opcode reload 111
show upgrade 111
TFTP Configuration Commands 111
ip tftp retry 111

ip tftp timeout 112
show ip tftp 112
Line 113
line 114
databits 115
exec-timeout 115
login 116
parity 117
password 118
password-thresh 118
silent-time 119
speed 120
stopbits 120
timeout login response 121
disconnect 122
terminal 122
show line 123
Event Logging 124
logging command 124
logging facility 125
logging history 125
logging host 126
logging on 127
logging trap 128
clear log 128
show log 129
show logging 130
SMTP Alerts 131
logging sendmail 132
logging sendmail destination-email 132
logging sendmail host 133
logging sendmail level 133
logging sendmail source-email 134
show logging sendmail 135
Time 135

SNTP Commands 136
sntp client 136
sntp poll 137
sntp server 137
show sntp 138
NTP Commands 139
ntp authenticate 139
ntp authentication-key 139
ntp client 140
ntp server 141
show ntp 142
Manual Configuration Commands 142
clock summer-time (date) 142
clock summer-time (predefined) 144
clock summer-time (recurring) 145
clock timezone 146
calendar set 147
show calendar 148
Time Range 148
time-range 148
absolute 149
periodic 150
show time-range 151
Switch Clustering 151
cluster 152
cluster commander 153
cluster ip-pool 154
cluster member 155
rcommand 155
show cluster 156
show cluster members 156
show cluster candidates 157

5 SNMP Commands 159

General SNMP Commands 161
snmp-server 161
snmp-server community 161
snmp-server contact 162
snmp-server location 163
show snmp 163
SNMP Target Host Commands 164
snmp-server enable traps 164
snmp-server host 165
snmp-server enable port-traps link-up-down 167
snmp-server enable port-traps mac-notification 168
show snmp-server enable port-traps 168
SNMPv3 Commands 169
snmp-server engine-id 169
snmp-server group 170
snmp-server user 171
snmp-server view 173
show snmp engine-id 174
show snmp group 175
show snmp user 176
show snmp view 177
Notification Log Commands 177
nlm 177
snmp-server notify-filter 178
show nlm oper-status 180
show snmp notify-filter 180
Additional Trap Commands 180
memory 180
process cpu 181
process cpu guard 182

6 Remote Monitoring Commands 185

rmon alarm 186
rmon event 187
rmon collection history 188

rmon collection rmon1 189
show rmon alarms 190
show rmon events 190
show rmon history 191
show rmon statistics 191

7 Flow Sampling Commands 193
sflow owner 193
sflow polling instance 195
sflow sampling instance 196
show sflow 197

8 Authentication Commands 199
User Accounts and Privilege Levels 200
enable password 200
username 201
privilege 203
show privilege 203
Authentication Sequence 204
authentication enable 204
authentication login 205
RADIUS Client 206
radius-server acct-port 206
radius-server auth-port 207
radius-server host 207
radius-server key 208
radius-server retransmit 209
radius-server timeout 209
show radius-server 210
TACACS+ Client 210
tacacs-server host 211
tacacs-server key 211
tacacs-server port 212
tacacs-server retransmit 212
tacacs-server timeout 213
show tacacs-server 213

AAA 214
aaa accounting commands 215
aaa accounting dot1x 216
aaa accounting exec 217
aaa accounting update 218
aaa authorization commands 218
aaa authorization exec 219
aaa group server 220
server 221
accounting dot1x 221
accounting commands 222
accounting exec 222
authorization commands 223
authorization exec 224
show accounting 224
show authorization 225
Web Server 226
ip http authentication 227
ip http port 227
ip http server 228
ip http secure-port 228
ip http secure-server 229
Telnet Server 230
ip telnet max-sessions 231
ip telnet port 231
ip telnet server 232
telnet (client) 232
show ip telnet 233
Secure Shell 233
ip ssh authentication-retries 236
ip ssh server 236
ip ssh server-key size 237
ip ssh timeout 238
delete public-key 238
ip ssh crypto host-key generate 239

ip ssh crypto zeroize 240
ip ssh save host-key 240
show ip ssh 241
show public-key 241
show ssh 242
802.1X Port Authentication 243
General Commands 244
dot1x default 244
dot1x system-auth-control 244
Authenticator Commands 245
dot1x intrusion-action 245
dot1x max-reauth-req 246
dot1x max-req 246
dot1x operation-mode 247
dot1x port-control 248
dot1x re-authentication 248
dot1x timeout quiet-period 249
dot1x timeout re-authperiod 249
dot1x timeout supp-timeout 250
dot1x timeout tx-period 250
dot1x re-authenticate 251
Supplicant Commands 252
dot1x timeout auth-period 252
dot1x timeout held-period 252
Information Display Commands 253
show dot1x 253
Management IP Filter 255
management 255
show management 256

9 General Security Measures 259

Port Security 260
mac-learning 260
port security 261
show port security 263

Network Access (MAC Address Authentication) 265
network-access aging 265
network-access mac-filter 266
mac-authentication reauth-time 267
network-access dynamic-qos 268
network-access dynamic-vlan 269
network-access guest-vlan 270
network-access max-mac-count 270
network-access mode mac-authentication 271
network-access port-mac-filter 272
mac-authentication intrusion-action 273
mac-authentication max-mac-count 273
clear network-access 274
show network-access 274
show network-access mac-address-table 275
show network-access mac-filter 276
Web Authentication 276
web-auth login-attempts 277
web-auth quiet-period 278
web-auth session-timeout 278
web-auth system-auth-control 279
web-auth 279
web-auth re-authenticate (Port) 280
web-auth re-authenticate (IP) 280
show web-auth 281
show web-auth interface 281
show web-auth summary 282
DHCPv4 Snooping 282
ip dhcp snooping 283
ip dhcp snooping information option 285
ip dhcp snooping information option encode no-subtype 286
ip dhcp snooping information option remote-id 288
ip dhcp snooping information option tr101 board-id 289
ip dhcp snooping information policy 289
ip dhcp snooping verify mac-address 290

ip dhcp snooping vlan 291
ip dhcp snooping information option circuit-id 292
ip dhcp snooping trust 293
ip dhcp snooping max-number 294
ip dhcp snooping trust 295
clear ip dhcp snooping binding 296
clear ip dhcp snooping database flash 296
ip dhcp snooping database flash 296
show ip dhcp snooping 297
show ip dhcp snooping binding 297
IPv4 Source Guard 298
ip source-guard binding 298
ip source-guard 300
ip source-guard max-binding 302
ip source-guard mode 303
clear ip source-guard binding blocked 303
show ip source-guard 304
show ip source-guard binding 304
ARP Inspection 305
ip arp inspection 306
ip arp inspection filter 307
ip arp inspection log-buffer logs 308
ip arp inspection validate 309
ip arp inspection vlan 310
ip arp inspection limit 311
ip arp inspection trust 311
show ip arp inspection configuration 312
show ip arp inspection interface 312
show ip arp inspection log 313
show ip arp inspection statistics 313
show ip arp inspection vlan 313
Denial of Service Protection 314
dos-protection echo-chargen 314
dos-protection smurf 315
dos-protection tcp-flooding 315

dos-protection tcp-null-scan 316
dos-protection tcp-syn-fin-scan 316
dos-protection tcp-xmas-scan 317
dos-protection udp-flooding 317
dos-protection win-nuke 318
show dos-protection 318
Port-based Traffic Segmentation 319
traffic-segmentation 319
traffic-segmentation session 320
traffic-segmentation uplink/downlink 321
traffic-segmentation uplink-to-uplink 322
show traffic-segmentation 323

10 Access Control Lists 325

IPv4 ACLs 325
access-list ip 326
permit, deny (Standard IP ACL) 326
permit, deny (Extended IPv4 ACL) 327
ip access-group 330
show ip access-group 331
show ip access-list 331
IPv6 ACLs 332
access-list ipv6 332
permit, deny (Standard IPv6 ACL) 333
permit, deny (Extended IPv6 ACL) 334
ipv6 access-group 337
show ipv6 access-group 337
show ipv6 access-list 338
MAC ACLs 338
access-list mac 339
permit, deny (MAC ACL) 339
mac access-group 342
show mac access-group 343
show mac access-list 343
ARP ACLs 344

access-list arp 344
permit, deny (ARP ACL) 345
show access-list arp 346
ACL Information 346
clear access-list hardware counters 347
show access-group 347
show access-list 348

11 Interface Commands 349
Interface Configuration 350
interface 350
capabilities 351
description 352
flowcontrol 353
history 354
media-type 354
negotiation 355
shutdown 356
speed-duplex 356
clear counters 357
show interfaces brief 358
show interfaces counters 359
show interfaces history 362
show interfaces status 364
show interfaces switchport 365
Transceiver Threshold Configuration 366
transceiver-monitor 366
transceiver-threshold-auto 367
transceiver-threshold current 367
transceiver-threshold rx-power 368
transceiver-threshold temperature 369
transceiver-threshold tx-power 370
transceiver-threshold voltage 371
show interfaces transceiver 372
show interfaces transceiver-threshold 373

Cable Diagnostics 374
test cable-diagnostics 374
show cable-diagnostics 375
Power Savings 376
power-save 376
show power-save 377

12 Link Aggregation Commands 379
Manual Configuration Commands 380
port channel load-balance 380
channel-group 382
Dynamic Configuration Commands 383
lacp 383
lacp admin-key (Ethernet Interface) 384
lacp port-priority 385
lacp system-priority 386
lacp admin-key (Port Channel) 387
lacp timeout 388
Trunk Status Display Commands 389
show lacp 389
show port-channel load-balance 392

13 Port Mirroring Commands 393
Local Port Mirroring Commands 393
port monitor 393
show port monitor 394
RSPAN Mirroring Commands 395
rspan source 397
rspan destination 398
rspan remote vlan 399
no rspan session 400
show rspan 401

14 Congestion Control Commands 403
Rate Limit Commands 403
rate-limit 404

Storm Control Commands 405
switchport packet-rate 405

15 Loopback Detection Commands 407
loopback-detection 408
loopback-detection action 408
loopback-detection recover-time 409
loopback-detection transmit-interval 410
loopback detection trap 410
loopback-detection release 411
show loopback-detection 411

16 Address Table Commands 413
mac-address-table aging-time 413
mac-address-table static 414
clear collision-mac-address-table 415
clear mac-address-table dynamic 415
show collision-mac-address-table 415
show mac-address-table 416
show mac-address-table aging-time 417
show mac-address-table count 417

17 Spanning Tree Commands 419
spanning-tree 420
spanning-tree cisco-prestandard 421
spanning-tree forward-time 421
spanning-tree hello-time 422
spanning-tree max-age 423
spanning-tree mode 423
spanning-tree mst configuration 425
spanning-tree pathcost method 425
spanning-tree priority 426
spanning-tree system-bpdu-flooding 427
spanning-tree tc-prop 427
spanning-tree transmission-limit 428
max-hops 429

mst priority 429
mst vlan 430
name 431
revision 431
spanning-tree bpdu-filter 432
spanning-tree bpdu-guard 433
spanning-tree cost 434
spanning-tree edge-port 435
spanning-tree link-type 436
spanning-tree loopback-detection 436
spanning-tree loopback-detection action 437
spanning-tree loopback-detection release-mode 438
spanning-tree loopback-detection trap 439
spanning-tree mst cost 439
spanning-tree mst port-priority 440
spanning-tree port-bpdu-flooding 441
spanning-tree port-priority 441
spanning-tree root-guard 442
spanning-tree spanning-disabled 443
spanning-tree tc-prop-stop 443
spanning-tree loopback-detection release 444
spanning-tree protocol-migration 445
show spanning-tree 445
show spanning-tree mst configuration 448
show spanning-tree tc-prop 448

18 VLAN Commands 449

Editing VLAN Groups 449
vlan database 449
vlan 450
Configuring VLAN Interfaces 451
interface vlan 452
switchport acceptable-frame-types 452
switchport allowed vlan 453
switchport ingress-filtering 454

switchport mode 455
switchport native vlan 456
Displaying VLAN Information 457
show vlan 457
Configuring IEEE 802.1Q Tunneling 458
dot1q-tunnel system-tunnel-control 459
switchport dot1q-tunnel mode 460
switchport dot1q-tunnel priority map 460
switchport dot1q-tunnel service match cvid 461
switchport dot1q-tunnel tpid 463
show dot1q-tunnel 464
Configuring Protocol-based VLANs 465
protocol-vlan protocol-group (Configuring Groups) 466
protocol-vlan protocol-group (Configuring Interfaces) 467
show protocol-vlan protocol-group 468
show interfaces protocol-vlan protocol-group 468
Configuring MAC Based VLANs 469
mac-vlan 469
show mac-vlan 470
Configuring Voice VLANs 471
voice vlan 471
voice vlan aging 472
voice vlan mac-address 473
switchport voice vlan 474
switchport voice vlan priority 475
switchport voice vlan rule 475
switchport voice vlan security 476
show voice vlan 477

19 ERPS Commands 479

erps 481
erps domain 481
control-vlan 482
enable 483
guard-timer 484

holdoff-timer 484
major-domain 485
meg-level 486
mep-monitor 487
node-id 488
non-erps-dev-protect 488
non-revertive 490
propagate-tc 493
raps-def-mac 494
raps-without-vc 495
ring-port 497
rpl neighbor 498
rpl owner 498
version 499
wtr-timer 500
clear erps statistics 501
erps clear 501
erps forced-switch 502
erps manual-switch 504
show erps 505

20 Class of Service Commands 511

Priority Commands (Layer 2) 511
queue mode 512
queue weight 513
switchport priority default 514
show queue mode 515
show queue weight 515
Priority Commands (Layer 3 and 4) 516
qos map cos-queue 516
qos map dscp-queue 518
qos map trust-mode 519
show qos map cos-queue 520
show qos map dscp-queue 521
show qos map trust-mode 521

21 Quality of Service Commands 523

class-map 524
description 525
match 526
rename 527
policy-map 527
class 528
police rate 529
set cos 530
service-policy 531
show class-map 531
show policy-map 532
show policy-map interface 533

22 Multicast Filtering Commands 535

IGMP Snooping 535
ip igmp snooping 537
ip igmp snooping priority 538
ip igmp snooping proxy-reporting 538
ip igmp snooping querier 539
ip igmp snooping router-alert-option-check 540
ip igmp snooping router-port-expire-time 540
ip igmp snooping tcn-flood 541
ip igmp snooping tcn-query-solicit 542
ip igmp snooping unregistered-data-flood 543
ip igmp snooping unsolicited-report-interval 543
ip igmp snooping version 544
ip igmp snooping version-exclusive 545
ip igmp snooping vlan general-query-suppression 545
ip igmp snooping vlan immediate-leave 546
ip igmp snooping vlan last-memb-query-count 547
ip igmp snooping vlan last-memb-query-intvl 548
ip igmp snooping vlan mrd 548
ip igmp snooping vlan proxy-address 549
ip igmp snooping vlan query-interval 551

ip igmp snooping vlan query-resp-intvl 551
ip igmp snooping vlan static 552
clear ip igmp snooping groups dynamic 553
clear ip igmp snooping statistics 553
show ip igmp snooping 554
show ip igmp snooping group 555
show ip igmp snooping mrouter 556
show ip igmp snooping statistics 556
Static Multicast Routing 559
ip igmp snooping vlan mrouter 559
IGMP Filtering and Throttling 560
ip igmp filter (Global Configuration) 561
ip igmp profile 561
permit, deny 562
range 562
ip igmp filter (Interface Configuration) 563
ip igmp max-groups 564
ip igmp max-groups action 564
ip igmp query-drop 565
ip multicast-data-drop 565
show ip igmp filter 566
show ip igmp profile 567
show ip igmp query-drop 567
show ip igmp throttle interface 568
show ip multicast-data-drop 569
MLD Snooping 569
ipv6 mld snooping 571
ipv6 mld snooping proxy-reporting 571
ipv6 mld snooping querier 572
ipv6 mld snooping query-interval 572
ipv6 mld snooping query-max-response-time 573
ipv6 mld snooping robustness 573
ipv6 mld snooping router-port-expire-time 574
ipv6 mld snooping unknown-multicast mode 575
ipv6 mld snooping unsolicited-report-interval 575

ipv6 mld snooping version 576
ipv6 mld snooping vlan immediate-leave 576
ipv6 mld snooping vlan mrouter 577
ipv6 mld snooping vlan static 578
clear ipv6 mld snooping groups dynamic 578
clear ipv6 mld snooping statistics 579
show ipv6 mld snooping 579
show ipv6 mld snooping group 580
show ipv6 mld snooping group source-list 581
show ipv6 mld snooping mrouter 581
show ipv6 mld snooping statistics 582
MLD Filtering and Throttling 586
ipv6 mld filter (Global Configuration) 586
ipv6 mld profile 587
permit, deny 588
range 588
ipv6 mld filter (Interface Configuration) 589
ipv6 mld max-groups 589
ipv6 mld max-groups action 590
ipv6 mld query-drop 591
show ipv6 mld filter 591
show ipv6 mld profile 592
show ipv6 mld query-drop 592
show ipv6 mld throttle interface 593

23 LLDP Commands 595

lldp 597
lldp holdtime-multiplier 597
lldp med-fast-start-count 598
lldp notification-interval 598
lldp refresh-interval 599
lldp reinit-delay 599
lldp tx-delay 600
lldp admin-status 601
lldp basic-tlv management-ip-address 601

lldp basic-tlv port-description 602
lldp basic-tlv system-capabilities 602
lldp basic-tlv system-description 603
lldp basic-tlv system-name 603
lldp dot1-tlv proto-ident 604
lldp dot1-tlv proto-vid 604
lldp dot1-tlv pvid 605
lldp dot1-tlv vlan-name 605
lldp dot3-tlv link-agg 606
lldp dot3-tlv mac-phy 606
lldp dot3-tlv max-frame 607
lldp med-location civic-addr 608
lldp med-notification 609
lldp med-tlv inventory 610
lldp med-tlv location 611
lldp med-tlv med-cap 611
lldp med-tlv network-policy 612
lldp notification 612
show lldp config 613
show lldp info local-device 614
show lldp info remote-device 615
show lldp info statistics 617

24 Domain Name Service Commands 619

DNS Commands 620
ip domain-list 620
ip domain-lookup 621
ip domain-name 622
ip host 622
ip name-server 623
ipv6 host 624
clear dns cache 625
clear host 625
show dns 626
show dns cache 626

show hosts 627
Multicast DNS Commands 627
ip mdns 627
show ip mdns 628

25 DHCP Commands 629
DHCP Client 629
DHCP for IPv4 630
ip dhcp dynamic-provision 630
ip dhcp client class-id 631
ip dhcp restart client 633
show ip dhcp dynamic-provision 633
DHCP for IPv6 634
ipv6 dhcp client rapid-commit vlan 634
ipv6 dhcp restart client vlan 634
show ipv6 dhcp duid 636
show ipv6 dhcp vlan 636
DHCP Relay 637
ip dhcp relay server 637
ip dhcp restart relay 638

26 IP Interface Commands 641
IPv4 Interface 641
Basic IPv4 Configuration 642
ip address 642
ip default-gateway 644
show ip default-gateway 645
show ip interface 645
show ip traffic 646
traceroute 647
ping 648
ARP Configuration 649
arp 649
ip proxy-arp 650
clear arp-cache 651
show arp 651

IPv6 Interface 652
Interface Address Configuration and Utilities 653
ipv6 default-gateway 653
ipv6 address 654
ipv6 address autoconfig 655
ipv6 address eui-64 657
ipv6 address link-local 659
ipv6 enable 660
ipv6 mtu 661
show ipv6 default-gateway 662
show ipv6 interface 662
show ipv6 mtu 665
show ipv6 traffic 665
clear ipv6 traffic 670
ping6 670
traceroute6 671
Neighbor Discovery 673
ipv6 nd dad attempts 673
ipv6 nd ns-interval 674
ipv6 nd reachable-time 676
clear ipv6 neighbors 677
show ipv6 neighbors 677

28 IP Routing Commands 679
Global Routing Configuration 679
IPv4 Commands 680
ip route 680
show ip route 681

Section III Appendices 683

A Troubleshooting 685
Problems Accessing the Management Interface 685
Using System Logs 686

B License Information 687

The GNU General Public License 687

Glossary 691

Commands 699

Index 705

Tables

Table 1: Options 60, 66 and 67 Statements 58
Table 2: Options 55 and 124 Statements 58
Table 3: General Command Modes 70
Table 4: Configuration Command Modes 72
Table 5: Keystroke Commands 73
Table 6: Command Group Index 74
Table 7: General Commands 77
Table 8: System Management Commands 85
Table 9: Device Designation Commands 85
Table 10: System Status Commands 86
Table 11: show access-list tcam-utilization - display description 88
Table 12: show process cpu guard - display description 90
Table 13: show system – display description 95
Table 14: show version – display description 97
Table 15: Fan Control Commands 98
Table 16: Frame Size Commands 99
Table 17: Flash/File Commands 100
Table 18: File Directory Information 107
Table 19: Line Commands 113
Table 20: Event Logging Commands 124
Table 21: Logging Levels 126
Table 22: show logging flash/ram - display description 130
Table 23: show logging trap - display description 131
Table 24: Event Logging Commands 131
Table 25: Time Commands 135
Table 26: Predefined Summer-Time Parameters 144
Table 27: Time Range Commands 148
Table 28: Switch Cluster Commands 151
Table 29: SNMP Commands 159

Table 30: show snmp engine-id - display description 174
Table 31: show snmp group - display description 175
Table 32: show snmp user - display description 176
Table 33: show snmp view - display description 177
Table 34: RMON Commands 185
Table 35: sFlow Commands 193
Table 36: Authentication Commands 199
Table 37: User Access Commands 200
Table 38: Default Login Settings 202
Table 39: Authentication Sequence Commands 204
Table 40: RADIUS Client Commands 206
Table 41: TACACS+ Client Commands 210
Table 42: AAA Commands 214
Table 43: Web Server Commands 226
Table 44: HTTPS System Support 230
Table 45: Telnet Server Commands 230
Table 46: Secure Shell Commands 233
Table 47: show ssh - display description 242
Table 48: 802.1X Port Authentication Commands 243
Table 49: Management IP Filter Commands 255
Table 50: General Security Commands 259
Table 51: Management IP Filter Commands 260
Table 52: show port security - display description 263
Table 53: Network Access Commands 265
Table 54: Dynamic QoS Profiles 268
Table 55: Web Authentication 277
Table 56: DHCP Snooping Commands 282
Table 57: Option 82 information 287
Table 58: Option 82 information 292
Table 59: IPv4 Source Guard Commands 298
Table 60: ARP Inspection Commands 305
Table 61: DoS Protection Commands 314
Table 62: Commands for Configuring Traffic Segmentation 319
Table 63: Traffic Segmentation Forwarding 320
Table 64: Access Control List Commands 325

Table 65: IPv4 ACL Commands 325
Table 66: IPv6 ACL Commands 332
Table 67: MAC ACL Commands 338
Table 68: ARP ACL Commands 344
Table 69: ACL Information Commands 346
Table 70: Interface Commands 349
Table 71: show interfaces counters - display description 360
Table 72: show interfaces switchport - display description 366
Table 73: Link Aggregation Commands 379
Table 74: show lacp counters - display description 389
Table 75: show lacp internal - display description 390
Table 76: show lacp neighbors - display description 391
Table 77: show lacp sysid - display description 392
Table 78: Port Mirroring Commands 393
Table 79: Mirror Port Commands 393
Table 80: RSPAN Commands 395
Table 81: Congestion Control Commands 403
Table 82: Rate Limit Commands 403
Table 83: Rate Limit Commands 405
Table 84: Loopback Detection Commands 407
Table 85: Address Table Commands 413
Table 86: Spanning Tree Commands 419
Table 87: Recommended STA Path Cost Range 434
Table 88: Default STA Path Costs 434
Table 89: VLAN Commands 449
Table 90: Commands for Editing VLAN Groups 449
Table 91: Commands for Configuring VLAN Interfaces 451
Table 92: Commands for Displaying VLAN Information 457
Table 93: 802.1Q Tunneling Commands 458
Table 94: Protocol-based VLAN Commands 465
Table 95: MAC Based VLAN Commands 469
Table 96: Voice VLAN Commands 471
Table 97: ERPS Commands 479
Table 98: ERPS Request/State Priority 503
Table 99: show erps - summary display description 506

Table 100: show erps domain - detailed display description 507
Table 101: show erps statistics - detailed display description 509
Table 102: Priority Commands 511
Table 103: Priority Commands (Layer 2) 511
Table 104: Priority Commands (Layer 3 and 4) 516
Table 105: Default Mapping of CoS/CFI Values to Queue/CFI 517
Table 106: Default Mapping of DSCP/CFI Values to Queue 518
Table 107: Quality of Service Commands 523
Table 108: Multicast Filtering Commands 535
Table 109: IGMP Snooping Commands 535
Table 110: show ip igmp snooping statistics input - display description 557
Table 111: show ip igmp snooping statistics output - display description 557
Table 112: show ip igmp snooping statistics vlan query - display description 558
Table 113: Static Multicast Interface Commands 559
Table 114: IGMP Filtering and Throttling Commands 560
Table 115: MLD Snooping Commands 570
Table 116: show ipv6 MLD snooping statistics input - display description 582
Table 117: show ipv6 MLD snooping statistics output - display description 583
Table 118: show ipv6 MLD snooping statistics query - display description 584
Table 119: show ipv6 MLD snooping statistics summary - display description 585
Table 120: MLD Filtering and Throttling Commands 586
Table 121: LLDP Commands 595
Table 122: LLDP MED Location CA Types 608
Table 123: Address Table Commands 619
Table 124: show dns cache - display description 626
Table 125: show hosts - display description 627
Table 126: DHCP Commands 629
Table 127: DHCP Client Commands 629
Table 128: Options 60, 66 and 67 Statements 632
Table 129: Options 55 and 124 Statements 632
Table 130: DHCP Relay Option 82 Commands 637
Table 131: IP Interface Commands 641
Table 132: IPv4 Interface Commands 641
Table 133: Basic IP Configuration Commands 642
Table 134: Address Resolution Protocol Commands 649

Table 135: IPv6 Configuration Commands 652
Table 136: show ipv6 interface - display description 663
Table 137: show ipv6 mtu - display description 665
Table 138: show ipv6 traffic - display description 666
Table 139: show ipv6 neighbors - display description 677
Table 160: IP Routing Commands 679
Table 161: Global Routing Configuration Commands 679
Table 162: Troubleshooting Chart 685

Section I

Getting Started

This section describes how to configure the switch for management access through the web interface or SNMP.

This section includes these chapters:

- "Initial Switch Configuration" on page 39

1 Initial Switch Configuration

This chapter includes information on connecting to the switch and basic configuration procedures.

Connecting to the Switch

The switch includes a built-in network management agent. The agent offers a variety of management options, including SNMP, RMON and a web-based interface. A PC may also be connected directly to the switch for configuration and monitoring via a command line interface (CLI).

Note: An IPv4 address for this switch is obtained via DHCP by default. To change this address, see "Setting an IP Address" on page 42.

Configuration Options

The switch's HTTP web agent allows you to configure switch parameters, monitor port connections, and display statistics using a standard web browser such as Internet Explorer 11, Mozilla Firefox 53, or Google Chrome 59, or more recent versions. The switch's web management interface can be accessed from any computer attached to the network.

The CLI program can be accessed by a direct connection to the RS-232 serial console port on the switch, or remotely by a Telnet connection over the network.

The switch's management agent also supports SNMP (Simple Network Management Protocol). This SNMP agent permits the switch to be managed from any system in the network using network management software.

The switch's web interface, console interface, and SNMP agent allow you to perform the following management functions:

- Set user names and passwords
- Set an IP interface for any VLAN
- Configure SNMP parameters
- Enable/disable any port
- Set the speed/duplex mode for any port
- Configure the bandwidth of any port by limiting input or output rates
- Control port access through IEEE 802.1X security or static address filtering

- Filter packets using Access Control Lists (ACLs)
- Configure up to 4094 IEEE 802.1Q VLANs
- Configure IP routing for unicast traffic
- Configure IGMP multicast filtering
- Upload and download system firmware or configuration files via HTTP (using the web interface) or FTP/SFTP/TFTP (using the command line or web interface)
- Configure Spanning Tree parameters
- Configure Class of Service (CoS) priority queuing
- Configure static or LACP trunks (up to 8)
- Enable port mirroring
- Set storm control on any port for excessive broadcast, multicast, or unknown unicast traffic
- Display system information and statistics

Connecting to the Console Port

The switch provides an RS-232 serial port that enables a connection to a PC or terminal for monitoring and configuring the switch. A null-modem console cable is provided with the switch.

Attach a VT100-compatible terminal, or a PC running a terminal emulation program to the switch. You can use the console cable provided with this package, or use a null-modem cable that complies with the wiring assignments shown in the Installation Guide.

To connect a terminal to the console port, complete the following steps:

1. Connect the console cable to the serial port on a terminal, or a PC running terminal emulation software, and tighten the captive retaining screws on the DB-9 connector.

2. Connect the other end of the cable to the RS-45 serial port on the switch.

3. Make sure the terminal emulation software is set as follows:
   - Select the appropriate serial port (COM port 1 or COM port 2).
   - Set the baud rate to 115200 bps.
   - Set the data format to 8 data bits, 1 stop bit, and no parity.
   - Set flow control to none.
   - Set the emulation mode to VT100.
   - When using HyperTerminal, select Terminal keys, not Windows keys.

4. Power on the switch.

   After the system completes the boot cycle, the logon screen appears.

Logging Onto the Command Line Interface

The CLI program provides two different command levels — normal access level (Normal Exec) and privileged access level (Privileged Exec). The commands available at the Normal Exec level are a limited subset of those available at the Privileged Exec level and allow you to only display information and use basic utilities. To fully configure the switch parameters, you must access the CLI at the Privileged Exec level.

Access to both CLI levels are controlled by user names and passwords. The switch has a default user name and password for each level. To log into the CLI at the Privileged Exec level using the default user name and password, perform these steps:

1. To initiate your console connection, press <Enter>. The "User Access Verification" procedure starts.
2. At the User Name prompt, enter "admin."
3. At the Password prompt, also enter "admin." (The password characters are not displayed on the console screen.)
4. The session is opened and the CLI displays the "Console#" prompt indicating you have access at the Privileged Exec level.

Setting Passwords

If this is your first time to log into the CLI program, you should define new passwords for both default user names using the "username" command, record them and put them in a safe place.

Passwords can consist of up to 32 alphanumeric characters and are case sensitive. To prevent unauthorized access to the switch, set the passwords as follows:

1. Open the console interface with the default user name and password "admin" to access the Privileged Exec level.
2. Type "configure" and press <Enter>.
3. Type "username guest password 0 *password*," for the Normal Exec level, where *password* is your new password. Press <Enter>.
4. Type "username admin password 0 *password*," for the Privileged Exec level, where *password* is your new password. Press <Enter>.

```
Username: admin
Password:

 CLI session with the GEL-5261 is opened.
 To end the CLI session, enter [Exit].

Console#configure
Console(config)#username guest password 0 [password]
```

```
Console(config)#username admin password 0 [password]
Console(config)#
```

Remote Connections

Prior to accessing the switch's onboard agent via a network connection, you must first configure it with a valid IPv4 or IPv6 address, subnet mask, and default gateway using a console connection, BOOTP or DHCP protocol. To configure this device as the default gateway, use the ip default-gateway command.

The IPv4 address for the switch is 192.168.1.1 by default. To manually configure this address or enable dynamic address assignment via DHCP, see "Setting an IP Address" on page 42.

After configuring the switch's IP parameters, you can access the onboard configuration program from anywhere within the attached network. The onboard configuration program can be accessed using Telnet or SSH from any computer attached to the network. The switch can also be managed by any computer using a web browser (Internet Explorer 11, Mozilla Firefox 53, or Google Chrome 59, or more recent versions), or from a network computer using SNMP network management software.

Note: This switch supports eight Telnet sessions or SSH sessions.

Note: Any VLAN group can be assigned an IP interface address (page 42) for managing the switch.

The onboard program only provides access to basic configuration functions. To access the full range of SNMP management functions, you must use SNMP-based network management software.

Configuring the Switch for Remote Management

Using the Network Interface

The switch can be managed through the operational network, known as in-band management. Because in-band management traffic is mixed in with operational network traffic, it is subject to all of the filtering rules usually applied to a standard network ports such as ACLs and VLAN tagging. In-band network management can be accessed via a connection to any network port (1-52).

Setting an IP Address

You must establish IP address information for a switch to obtain management access through the network. This can be done in either of the following ways:

Manual — You have to input the information, including IP address and subnet mask. If your management station is not in the same IP subnet as the switch, you will also need to specify the default gateway router. To configure this device as the

default gateway, use the ip default-gateway command.

- **Dynamic** — The switch can send IPv4 configuration requests to BOOTP or DHCP address allocation servers on the network, or automatically generate a unique IPv6 host address based on the local subnet address prefix received in router advertisement messages. An IPv6 link local address for use in a local network can also be dynamically generated as described in "Obtaining an IPv6 Address" on page 47.

  This switch is designed as a router, and therefore does not support DHCP for IPv6, so an IPv6 global unicast address for use in a network containing more than one subnet can only be manually configured as described in "Assigning an IPv6 Address" on page 44.

Manual Configuration

You can manually assign an IP address to the switch. You may also need to specify a default gateway that resides between this device and management stations that exist on another network segment. Valid IPv4 addresses consist of four decimal numbers, 0 to 255, separated by periods. Anything outside this format will not be accepted by the CLI program.

Note: The default IPv4 address and subnet mask for VLAN 1 is 192.168.1.1 255.255.255.255.

Assigning an IPv4 Address

Before you can assign an IP address to the switch, you must obtain the following information from your network administrator:

- IP address for the switch
- Network mask for this network
- Default gateway for the network

To assign an IPv4 address to the switch, complete the following steps

1. From the Global Configuration mode prompt, type "interface vlan 1" to access the interface-configuration mode. Press <Enter>.
2. Type "ip address *ip-address netmask*," where "ip-address" is the switch IP address and "netmask" is the network mask for the network. Press <Enter>.
3. Type "exit" to return to the global configuration mode prompt. Press <Enter>.
4. To set the IP address of the default gateway for the network to which the switch belongs, type "ip default-gateway *gateway*," where "gateway" is the IP address of the default gateway. Press <Enter>.

```
Console(config)#interface vlan 1
Console(config-if)#ip address 192.168.1.5 255.255.255.0
Console(config-if)#exit
Console(config)#ip default-gateway 192.168.1.254
```

Assigning an IPv6 Address

This section describes how to configure a "link local" address for connectivity within the local subnet only, and also how to configure a "global unicast" address, including a network prefix for use on a multi-segment network and the host portion of the address.

An IPv6 prefix or address must be formatted according to RFC 2373 "IPv6 Addressing Architecture," using 8 colon-separated 16-bit hexadecimal values. One double colon may be used to indicate the appropriate number of zeros required to fill the undefined fields. For detailed information on the other ways to assign IPv6 addresses, see "IPv6 Interface" on page 652.

Link Local Address — All link-local addresses must be configured with a prefix in the range of FE80~FEBF. Remember that this address type makes the switch accessible over IPv6 for all devices attached to the same local subnet only. Also, if the switch detects that the address you configured conflicts with that in use by another device on the subnet, it will stop using the address in question, and automatically generate a link local address that does not conflict with any other devices on the local subnet.

To configure an IPv6 link local address for the switch, complete the following steps:

1. From the Global Configuration mode prompt, type "interface vlan 1" to access the interface-configuration mode. Press <Enter>.

2. Type "ipv6 address" followed by up to 8 colon-separated 16-bit hexadecimal values for the *ipv6-address* similar to that shown in the example, followed by the "link-local" command parameter. Then press <Enter>.

```
Console(config)#interface vlan 1
Console(config-if)#ipv6 address FE80::260:3EFF:FE11:6700 link-local
Console(config-if)#ipv6 enable
Console(config-if)#end
Console#show ipv6 interface
VLAN 1 is up
IPv6 is enabled.
Link-local address:
  fe80::260:3eff:fe11:6700%1/64
Global unicast address(es):
(None)
Joined group address(es):
ff02::1:ff11:6700
ff02::1
IPv6 link MTU is 1500 bytes
ND DAD is enabled, number of DAD attempts: 3.
ND retransmit interval is 1000 milliseconds
ND advertised retransmit interval is 0 milliseconds
ND reachable time is 30000 milliseconds
```

```
ND advertised reachable time is 0 milliseconds
ND advertised router lifetime is 1800 seconds

Console#
```

Address for Multi-segment Network — Before you can assign an IPv6 address to the switch that will be used to connect to a multi-segment network, you must obtain the following information from your network administrator:

- Prefix for this network
- IP address for the switch
- Default gateway for the network

For networks that encompass several different subnets, you must define the full address, including a network prefix and the host address for the switch. You can specify either the full IPv6 address, or the IPv6 address and prefix length. The prefix length for an IPv6 network is the number of bits (from the left) of the prefix that form the network address, and is expressed as a decimal number. For example, all IPv6 addresses that start with the first byte of 73 (hexadecimal) could be expressed as 73:0:0:0:0:0:0:0/8 or 73::/8.

To generate an IPv6 global unicast address for the switch, complete the following steps:

1. From the global configuration mode prompt, type “interface vlan 1” to access the interface-configuration mode. Press <Enter>.

2. From the interface prompt, type “ipv6 address *ipv6-address*” or “ipv6 address *ipv6-address/prefix-length*,” where “prefix-length” indicates the address bits used to form the network portion of the address. (The network address starts from the left of the prefix and should encompass some of the ipv6-address bits.) The remaining bits are assigned to the host interface. Press <Enter>.

3. Type “exit” to return to the global configuration mode prompt. Press <Enter>.

4. To set the IP address of the IPv6 default gateway for the network to which the switch belongs, type “ipv6 default-gateway *gateway*,” where “gateway” is the IPv6 address of the default gateway. Press <Enter>.

```
Console(config)#interface vlan 1
Console(config-if)#ipv6 address 2001:DB8:2222:7272::/64
Console(config-if)#exit
Console(config)#ipv6 default-gateway 2001:DB8:2222:7272::254
Console(config)end
Console#show ipv6 interface
VLAN 1 is Administrative Up - Link Up
  Address is 00-E0-0C-00-00-FD
  Index: 1001, MTU: 1500
  Address Mode is DHCP
IPv6 is enabled.
Link-local address:
  fe80::260:3eff:fe11:6700%1/64
```

```
Global unicast address(es):
  2001:db8:2222:7272::/64, subnet is 2001:db8:2222:7272::/64
Joined group address(es):
ff02::1:ff00:0
ff02::1:ff11:6700
ff02::1
IPv6 link MTU is 1500 bytes
ND DAD is enabled, number of DAD attempts: 3.
ND retransmit interval is 1000 milliseconds
ND advertised retransmit interval is 0 milliseconds
ND reachable time is 30000 milliseconds
ND advertised reachable time is 0 milliseconds
ND advertised router lifetime is 1800 seconds

Console#show ipv6 default-gateway
IPv6 default gateway 2001:db8:2222:7272::254
Console#
```

Dynamic Configuration

Obtaining an IPv4 Address

If you select the “bootp” or “dhcp” option, the system will immediately start broadcasting service requests. IP will be enabled but will not function until a BOOTP or DHCP reply has been received. Requests are broadcast every few minutes using exponential backoff until IP configuration information is obtained from a BOOTP or DHCP server. BOOTP and DHCP values can include the IP address, subnet mask, and default gateway. If the DHCP/BOOTP server is slow to respond, you may need to use the “ip dhcp restart client” command to re-start broadcasting service requests.

Note that the “ip dhcp restart client” command can also be used to start broadcasting service requests for all VLANs configured to obtain address assignments through BOOTP or DHCP. It may be necessary to use this command when DHCP is configured on a VLAN, and the member ports which were previously shut down are now enabled.

If the “bootp” or “dhcp” option is saved to the startup-config file (step 6), then the switch will start broadcasting service requests as soon as it is powered on.

To automatically configure the switch by communicating with BOOTP or DHCP address allocation servers on the network, complete the following steps:

1. From the Global Configuration mode prompt, type “interface vlan 1” to access the interface-configuration mode. Press <Enter>.

2. At the interface-configuration mode prompt, use one of the following commands:
   - To obtain IP settings via DHCP, type “ip address dhcp” and press <Enter>.
   - To obtain IP settings via BOOTP, type “ip address bootp” and press <Enter>.

3. Type “end” to return to the Privileged Exec mode. Press <Enter>.

4. Wait a few minutes, and then check the IP configuration settings by typing the "show ip interface" command. Press <Enter>.

5. Then save your configuration changes by typing "copy running-config startup-config." Enter the startup file name and press <Enter>.

```
Console(config)#interface vlan 1
Console(config-if)#ip address dhcp
Console(config-if)#end
Console#show ip interface
VLAN 1 is Administrative Up - Link Up
  Address is 00-E0-0C-00-00-FD
  Index: 1001, MTU: 1500
  Address Mode is DHCP
  IP Address: 192.168.0.4 Mask: 255.255.255.0
  Proxy ARP is disabled
  DHCP Client Vendor Class ID (text): GEL-5261
  DHCP Relay Server:
Console#copy running-config startup-config
Startup configuration file name []: startup
\Write to FLASH Programming.

\Write to FLASH finish.
Success.
```

Obtaining an IPv6 Address

Link Local Address — There are several ways to configure IPv6 addresses. The simplest method is to automatically generate a "link local" address (identified by an address prefix in the range of FE80~FEBF). This address type makes the switch accessible over IPv6 for all devices attached to the same local subnet.

To generate an IPv6 link local address for the switch, complete the following steps:

1. From the Global Configuration mode prompt, type "interface vlan 1" to access the interface-configuration mode. Press <Enter>.
2. Type "ipv6 enable" and press <Enter>.

```
Console(config)#interface vlan 1
Console(config-if)#ipv6 enable
Console(config-if)#end
Console#show ipv6 interface
VLAN 1 is up
IPv6 is enabled.
Link-local address:
  fe80::2e0:cff:fe00:fd%1/64
Global unicast address(es):
  2001:db8:2222:7272::/64, subnet is 2001:db8:2222:7272::/64
Joined group address(es):
ff02::1:ff00:0
ff02::1:ff11:6700
ff02::1
IPv6 link MTU is 1500 bytes
ND DAD is enabled, number of DAD attempts: 3.
ND retransmit interval is 1000 milliseconds
ND advertised retransmit interval is 0 milliseconds
ND reachable time is 30000 milliseconds
```

```
ND advertised reachable time is 0 milliseconds
ND advertised router lifetime is 1800 seconds

Console#
```

Enabling SNMP Management Access

The switch can be configured to accept management commands from Simple Network Management Protocol (SNMP) applications. You can configure the switch to respond to SNMP requests or generate SNMP traps.

When SNMP management stations send requests to the switch (either to return information or to set a parameter), the switch provides the requested data or sets the specified parameter. The switch can also be configured to send information to SNMP managers (without being requested by the managers) through trap messages, which inform the manager that certain events have occurred.

The switch includes an SNMP agent that supports SNMP version 1, 2c, and 3 clients. To provide management access for version 1 or 2c clients, you must specify a community string. The switch provides a default MIB View (i.e., an SNMPv3 construct) for the default "public" community string that provides read access to the entire MIB tree, and a default view for the "private" community string that provides read/write access to the entire MIB tree. However, you may assign new views to version 1 or 2c community strings that suit your specific security requirements (see snmp-server view command).

Community Strings (for SNMP version 1 and 2c clients)

Community strings are used to control management access to SNMP version 1 and 2c stations, as well as to authorize SNMP stations to receive trap messages from the switch. You therefore need to assign community strings to specified users, and set the access level.

The default strings are:

- **public** - with read-only access. Authorized management stations are only able to retrieve MIB objects.
- **private** - with read/write access. Authorized management stations are able to both retrieve and modify MIB objects.

To prevent unauthorized access to the switch from SNMP version 1 or 2c clients, it is recommended that you change the default community strings.

To configure a community string, complete the following steps:

1. From the Privileged Exec level global configuration mode prompt, type "snmp-server community *string mode*," where "string" is the community access string

and "mode" is **rw** (read/write) or **ro** (read only). Press <Enter>. (Note that the default mode is read only.)

2. To remove an existing string, simply type "no snmp-server community *string*," where "string" is the community access string to remove. Press <Enter>.

```
Console(config)#snmp-server community admin rw
Console(config)#snmp-server community private
Console(config)#
```

Note: If you do not intend to support access to SNMP version 1 and 2c clients, we recommend that you delete both of the default community strings. If there are no community strings, then SNMP management access from SNMP v1 and v2c clients is disabled.

Trap Receivers

You can also specify SNMP stations that are to receive traps from the switch. To configure a trap receiver, use the "snmp-server host" command. From the Privileged Exec level global configuration mode prompt, type:

"snmp-server host *host-address community-string* [version {1 | 2c | 3 {auth | noauth | priv}}]"

where "host-address" is the IP address for the trap receiver, "community-string" specifies access rights for a version 1/2c host, or is the user name of a version 3 host, "version" indicates the SNMP client version, and "auth | noauth | priv" means that authentication, no authentication, or authentication and privacy is used for v3 clients. Then press <Enter>. For a more detailed description of these parameters, see the snmp-server host command. The following example creates a trap host for each type of SNMP client.

```
Console(config)#snmp-server host 10.1.19.23 batman
Console(config)#snmp-server host 10.1.19.98 robin version 2c
Console(config)#snmp-server host 10.1.19.34 barbie version 3 auth
Console(config)#
```

Configuring Access for SNMP Version 3 Clients

To configure management access for SNMPv3 clients, you need to first create a view that defines the portions of MIB that the client can read or write, assign the view to a group, and then assign the user to a group. The following example creates one view called "mib-2" that includes the entire MIB-2 tree branch, and then another view that includes the IEEE 802.1d bridge MIB. It assigns these respective read and read/write views to a group call "r&d" and specifies group authentication via MD5 or SHA. In the last step, it assigns a v3 user to this group, indicating that MD5 will be used for authentication, provides the password "greenpeace" for authentication, and the password "einstien" for encryption.

```
Console(config)#snmp-server view mib-2 1.3.6.1.2.1 included
Console(config)#snmp-server view 802.1d 1.3.6.1.2.1.17 included
Console(config)#snmp-server group r&d v3 auth read mib-2 write 802.1d
Console(config)#snmp-server user steve group r&d v3 auth md5 greenpeace priv
  des56 einstien
Console(config)#
```

For a more detailed explanation on how to configure the switch for access from SNMP v3 clients, refer to "SNMP Commands" on page 159 or to the *Web Management Guide*.

Managing System Files

The switch's flash memory supports three types of system files that can be managed by the CLI program, the web interface, or SNMP. The switch's file system allows files to be uploaded and downloaded, copied, deleted, and set as a start-up file.

The types of files are:

- **Configuration** — This file type stores system configuration information and is created when configuration settings are saved. Saved configuration files can be selected as a system start-up file or can be uploaded via FTP/SFTP/TFTP to a server for backup. The file named "Factory_Default_Config.cfg" contains all the system default settings and cannot be deleted from the system. If the system is booted with the factory default settings, the switch will also create a file named "startup1.cfg" that contains system settings for switch initialization, including information about the unit identifier, and MAC address for the switch. The configuration settings from the factory defaults configuration file are copied to this file, which is then used to boot the switch. See "Saving or Restoring Configuration Settings" on page 51 for more information.

- **Operation Code** — System software that is executed after boot-up, also known as run-time code. This code runs the switch operations and provides the CLI and web management interfaces.

- **Diagnostic Code** — Software that is run during system boot-up, also known as POST (Power On Self-Test).

Note: The Boot ROM and Loader cannot be uploaded or downloaded from the FTP/SFTP/TFTP server. You must follow the instructions in the release notes for new firmware, or contact your distributor for help.

Due to the size limit of the flash memory, the switch supports only two operation code files. However, you can have as many diagnostic code files and configuration files as available flash memory space allows. The switch has a total of 128 Mbytes of flash memory for system files.

In the system flash memory, one file of each type must be set as the start-up file. During a system boot, the diagnostic and operation code files set as the start-up file are run, and then the start-up configuration file is loaded.

Note that configuration files should be downloaded using a file name that reflects the contents or usage of the file settings. If you download directly to the running-config, the system will reboot, and the settings will have to be copied from the running-config to a permanent file.

Upgrading the Operation Code

The following example shows how to download new firmware to the switch and activate it. The TFTP server could be any standards-compliant server running on Windows or Linux. When downloading from an FTP server, the logon interface will prompt for a user name and password configured on the remote server. Note that "anonymous" is set as the default user name.

File names on the switch are case-sensitive. The destination file name should not contain slashes (\ or /), and the maximum length for file names is 32 characters for files on the switch or 128 characters for files on the server. (Valid characters: A-Z, a-z, 0-9, "", ".", "-")

```
Console#copy tftp file
TFTP server ip address: 10.1.0.19
Choose file type:
1. config: 2. opcode: 2
Source file name: m360.bix
Destination file name: m360.bix
\Write to FLASH Programming.
-Write to FLASH finish.
Success.
Console#config
Console(config)#boot system opcode: m360.bix
Console(config)#exit
Console#dir
File Name                       Type    Startup Modified Time       Size (bytes)
------------------------------ ------- ------- ------------------- ------------
 Unit 1:
Level1-5261_V1.1.10a.171.bix   OpCode  Y       2016-12-09 13:18:40      8646920
Factory_Default_Config.cfg     Config  N       2015-07-01 07:24:11          455
startup1.cfg                   Config  Y       2015-07-01 07:24:22         1343
-------------------------------------------------------------------------------
                        Free space for compressed user config files:   24043520
                                                          Total space:      32 MB
Console#
```

Saving or Restoring Configuration Settings

Configuration commands only modify the running configuration file and are not saved when the switch is rebooted. To save all your configuration changes in nonvolatile storage, you must copy the running configuration file to the start-up configuration file using the "copy" command.

New startup configuration files must have a name specified. File names on the switch are case-sensitive, can be from 1 to 31 characters, must not contain slashes

(\ or /), and the leading letter of the file name must not be a period (.). (Valid characters: A-Z, a-z, 0-9, “.”, “-”, “_”)

There can be more than one user-defined configuration file saved in the switch’s flash memory, but only one is designated as the “startup” file that is loaded when the switch boots. The **copy running-config startup-config** command always sets the new file as the startup file. To select a previously saved configuration file, use the **boot system config:**<*filename*> command.

The maximum number of saved configuration files depends on available flash memory. The amount of available flash memory can be checked by using the **dir** command.

To save the current configuration settings, enter the following command:

1. From the Privileged Exec mode prompt, type “copy running-config startup-config” and press <Enter>.

2. Enter the name of the start-up file. Press <Enter>.

```
Console#copy running-config startup-config
Startup configuration file name []: startup
\Write to FLASH Programming.

\Write to FLASH finish.
Success.

Console#
```

To restore configuration settings from a backup server, enter the following command:

1. From the Privileged Exec mode prompt, type “copy tftp startup-config” and press <Enter>.

2. Enter the address of the TFTP server. Press <Enter>.

3. Enter the name of the startup file stored on the server. Press <Enter>.

4. Enter the name for the startup file on the switch. Press <Enter>.

```
Console#copy tftp startup-config
TFTP server IP address: 192.168.0.4
Source configuration file name: startup-rd.cfg
Startup configuration file name [startup1.cfg]:

Success.
Console#
```

Automatic Installation of Operation Code and Configuration Settings

Downloading Operation Code from a File Server

Automatic Operation Code Upgrade can automatically download an operation code file when a file newer than the currently installed one is discovered on the file server. After the file is transferred from the server and successfully written to the file system, it is automatically set as the startup file, and the switch is rebooted.

Usage Guidelines

- If this feature is enabled, the switch searches the defined URL once during the bootup sequence.
- FTP (port 21) and TFTP (port 69) are both supported. Note that the TCP/UDP port bindings cannot be modified to support servers listening on non-standard ports.
- The host portion of the upgrade file location URL must be a valid IPv4 IP address. DNS host names are not recognized. Valid IP addresses consist of four numbers, 0 to 255, separated by periods.
- The path to the directory must also be defined. If the file is stored in the root directory for the FTP/TFTP service, then use the "/" to indicate this (e.g., ftp://192.168.0.1/).
- The file name must not be included in the upgrade file location URL. The file name of the code stored on the remote server must be level1-5261.bix (using lower case letters as indicated).
- The FTP connection is made with PASV mode enabled. PASV mode is needed to traverse some fire walls, even if FTP traffic is not blocked. PASV mode cannot be disabled.
- The switch-based search function is case-insensitive in that it will accept a file name in upper or lower case (i.e., the switch will accept *LEVEL1-5261.BIX* from the server even though *Level1-5261.bix* was requested). However, keep in mind that the file systems of many operating systems such as Unix and most Unix-like systems (FreeBSD, NetBSD, OpenBSD, and most Linux distributions, etc.) are case-sensitive, meaning that two files in the same directory, *level1-5261.bix* and *LEVEL1-5261.BIX* are considered to be unique files. Thus, if the upgrade file is stored as *LEVEL1-5261.BIX* (or even *Level1-5261.bix*) on a case-sensitive server, then the switch (requesting *LEVEL1-5261.BIX*) will not be upgraded because the server does not recognize the requested file name and the stored file name as being equal. A notable exception in the list of case-sensitive Unix-like operating systems is Mac OS X, which by default is case-insensitive. Please check the documentation for your server's operating system if you are unsure of its file system's behavior.

- Note that the switch itself does not distinguish between upper and lower-case file names, and only checks to see if the file stored on the server is more recent than the current runtime image.
- If two operation code image files are already stored on the switch's file system, then the non-startup image is deleted before the upgrade image is transferred.
- The automatic upgrade process will take place in the background without impeding normal operations (data switching, etc.) of the switch.
- During the automatic search and transfer process, the administrator cannot transfer or update another operation code image, configuration file, public key, or HTTPS certificate (i.e., no other concurrent file management operations are possible).
- The upgrade operation code image is set as the startup image after it has been successfully written to the file system.
- The switch will send an SNMP trap and make a log entry upon all upgrade successes and failures.
- The switch will immediately restart after the upgrade file is successfully written to the file system and set as the startup image.

To enable automatic upgrade, enter the following commands:

1. Specify the TFTP or FTP server to check for new operation code.
   - When specifying a TFTP server, the following syntax must be used, where *filedir* indicates the path to the directory containing the new image:

     `tftp://192.168.0.1[/filedir]/`
   - When specifying an FTP server, the following syntax must be used, where *filedir* indicates the path to the directory containing the new image:

     `ftp://[username[:password@]]192.168.0.1[/filedir]/`

     If the user name is omitted, "anonymous" will be used for the connection. If the password is omitted a null string ("") will be used for the connection.

     If no user name nor password is required for the connection, then the "@" character cannot be used in the path name.

This shows how to specify a TFTP server where new code is stored.

```
Console(config)#upgrade opcode path tftp://192.168.0.1/sm24/
Console(config)#
```

This shows how to specify an FTP server where new code is stored.

```
Console(config)#upgrade opcode path ftp://site9:billy@192.168.0.1/sm24/
Console(config)#
```

2. Set the switch to automatically reboot and load the new code after the opcode upgrade is completed.

```
Console(config)#upgrade opcode reload
Console(config)#
```

3. Set the switch to automatically upgrade the current operational code when a new version is detected on the server. When the switch starts up and automatic image upgrade is enabled by this command, the switch will follow these steps when it boots up:
   a. It will search for a new version of the image at the location specified by **upgrade opcode path** command. The name for the new image stored on the FTP/SFTP/TFTP server must be level1-5261.bix. If the switch detects a code version newer than the one currently in use, it will download the new image. If two code images are already stored in the switch, the image not set to start up the system will be overwritten by the new version.
   b. After the image has been downloaded, the switch will send a trap message to log whether or not the upgrade operation was successful.
   c. It sets the new version as the startup image.
   d. It then restarts the system to start using the new image.

```
Console(config)#upgrade opcode auto
Console(config)#
```

4. Display the automatic upgrade settings.

```
Console#show upgrade
Auto Image Upgrade Global Settings:
  Status     : Enabled
  Reload Status : Enabled
  Path       :
  File Name  : level1-5261.bix
Console#
```

The following shows an example of the upgrade process.

```
Console#dir
       File Name                 Type  Startup Modify Time        Size(bytes)
------------------------- ------------- ------- ------------------ -------
 Unit 1:
Level1-5261_V1.1.27.bix        OpCode      Y    2015-11-30 08:40:36    8037063
Factory_Default_Config.cfg     Config      N    2015-04-13 13:55:58        455
startup1.cfg                   Config      Y    2015-07-13 04:03:49       1707
 ---------------------------------------------------------------------------
                       Free space for compressed user config files:   1355776
                                                        Total space:      32 MB
...
Press ENTER to start session
Automatic Upgrade is looking for a new image
New image detected: current version V1.1.1.27; new version V1.1.1.31
Image upgrade in progress
Downloading new image
Flash programming started
Flash programming completed
Success
The switch will now restart
...
Press ENTER to start session
Automatic Upgrade is looking for a new image
No new image detected
User Access Verification

Username: admin
Password:

      CLI session with the GEL-5261 is opened.
      To end the CLI session, enter [Exit].

Console#dir
       File Name                 Type  Startup Modify Time        Size(bytes)
------------------------- ------------- ------- ------------------ -------
 Unit 1:
Level1-5261_V1.1.1.27.bix      OpCode      N    2015-06-10 11:21:26    8058496
Level1-5261_V1.1.1.31.bix      OpCode      Y    2015-11-30 08:40:36    8098056
Factory_Default_Config.cfg     Config      N    2015-04-13 13:55:58        455
startup1.cfg                   Config      Y    2015-07-13 04:03:49       1707
 ---------------------------------------------------------------------------
                       Free space for compressed user config files:   1310720
                                                        Total space:      32 MB
Console#
```

Specifying a DHCP Client Identifier

DHCP servers index their database of address bindings using the client's Media Access Control (MAC) Address or a unique client identifier. The client identifier is used to identify the vendor class and configuration of the switch to the DHCP server, which then uses this information to decide on how to service the client or the type of information to return.

DHCP client Identifier (Option 60) is used by DHCP clients to specify their unique identifier. The client identifier is optional and can be specified while configuring DHCP on the primary network interface. DHCP Option 60 is disabled by default.

The general framework for this DHCP option is set out in RFC 2132 (Option 60). This information is used to convey configuration settings or other identification information about a client, but the specific string to use should be supplied by your service provider or network administrator. Options 60 (vendor-class-identifier), 66 (tftp-server-name) and 67 (bootfile-name) statements can be added to the server daemon's configuration file as described in the following section.

If the DHCP server has an index entry for a switch requesting service, it should reply with the TFTP server name and boot file name. Note that the vendor class identifier can be formatted in either text or hexadecimal, but the format used by both the client and server must be the same.

```
Console(config)#interface vlan 2
Console(config-if)#ip dhcp client class-id hex 0000e8666572
Console(config-if)#
```

Downloading a Configuration File and Other Parameters from a DHCP Server

Information passed on to the switch from a DHCP server may also include a configuration file to be downloaded and the TFTP servers where that file can be accessed, as well as other parameters. If the Factory Default Configuration file is used to provision the switch at startup, in addition to requesting IP configuration settings from the DHCP server, it will also ask for the name of a bootup configuration file and TFTP servers where that file is stored.

If the switch receives information that allows it to download the remote bootup file, it will save this file to a local buffer, and then restart the provision process.

Note the following DHCP client behavior:

- To enable dynamic provisioning via a DHCP server, this feature must be enabled using the ip dhcp dynamic-provision command.
- The bootup configuration file received from a TFTP server is stored on the switch with the original file name. If this file name already exists in the switch, the file is overwritten.
- If the name of the bootup configuration file is the same as the Factory Default Configuration file, the download procedure will be terminated, and the switch will not send any further DHCP client requests.
- If the switch fails to download the bootup configuration file based on information passed by the DHCP server, it will not send any further DHCP client requests.
- If the switch does not receive a DHCP response prior to completing the bootup process, it will continue to send a DHCP client request once a minute. These

requests will only be terminated if the switch's address is manually configured, but will resume if the address mode is set back to DHCP.

To successfully transmit a bootup configuration file to the switch, the DHCP daemon (using a Linux based system for this example) must be configured with the following information:

- Options 60, 66 and 67 statements can be added to the daemon's configuration file.

Table 1: Options 60, 66 and 67 Statements

Option	Statement	
	Keyword	**Parameter**
60	vendor-class-identifier	a string indicating the vendor class identifier
66	tftp-server-name	a string indicating the tftp server name
67	bootfile-name	a string indicating the bootfile name

- By default, DHCP option 66/67 parameters are not carried in a DHCP server reply. To ask for a DHCP reply with option 66/67 information, the DHCP client request sent by this switch includes a "parameter request list" asking for this information. Besides these items, the client request also includes a "vendor class identifier" that allows the DHCP server to identify the device, and select the appropriate configuration file for download. This information is included in Option 55 and 124.

Table 2: Options 55 and 124 Statements

Option	Statement	
	Keyword	**Parameter**
55	dhcp-parameter-request-list	a list of parameters, separated by a comma ', '
124	vendor-class-identifier	a string indicating the vendor class identifier

The following configuration example is provided for a Linux-based DHCP daemon (dhcpd.conf file). In the "Vendor class" section, the server will always send Option 66 and 67 to tell the switch to download the "test" configuration file from server 192.168.255.101.

```
ddns-update-style ad-hoc;

default-lease-time 600;
max-lease-time 7200;

log-facility local7;

server-name "Server1";
Server-identifier 192.168.255.250;
#option 66, 67
 option space dynamicProvision code width 1 length 1 hash size 2;
 option dynamicProvision.tftp-server-name code 66 = text;
```

```
 option dynamicProvision.bootfile-name code 67 = text;

subnet 192.168.255.0 netmask 255.255.255.0 {
  range 192.168.255.160 192.168.255.200;
  option routers 192.168.255.101;
  option tftp-server-name "192.168.255.100"; #Default Option 66
  option bootfile-name "bootfile";           #Default Option 67
}

class "Option66,67_1" {                #DHCP Option 60 Vendor class
two
 match if option vendor-class-identifier = "level1-5261.cfg";
  option tftp-server-name "192.168.255.101";
  option bootfile-name "test";
}
```

Note: Use “level1-5261.cfg” for the vendor-class-identifier in the dhcpd.conf file.

Setting the System Clock

Simple Network Time Protocol (SNTP) or Network Time Protocol (NTP) can be used to set the switch’s internal clock based on periodic updates from a time server. Maintaining an accurate time on the switch enables the system log to record meaningful dates and times for event entries. You can also manually set the clock. If the clock is not set manually or via SNTP or NTP, the switch will only record the time from the factory default set at the last bootup.

When the SNTP client is enabled, the switch periodically sends a request for a time update to a configured time server. You can configure up to three time server IP addresses. The switch will attempt to poll each server in the configured sequence.

The switch also supports the following time settings:

- Time Zone – You can specify the offset from Coordinated Universal Time (UTC), also known as Greenwich Mean Time (GMT).
- Summer Time/Daylight Saving Time (DST) – In some regions, the time shifts by one hour in the fall and spring. The switch supports manual entry for one-time or recurring clock shifts.

Setting the Time Manually

To manually set the clock to 14:11:36, April 1st, 2013, enter this command.

```
Console#calendar set 14 11 36 1 April 2013
Console#
```

To set the time zone, enter a command similar to the following.

```
Console(config)#clock timezone Japan hours 8 after-UTC
Console(config)#
```

To set the time shift for summer time, enter a command similar to the following.

```
Console(config)#clock summer-time SUMMER date 2 april 2013 0 0 30 june 2013 0
  0
Console(config)#
```

To display the clock configuration settings, enter the following command.

```
Console#show calendar
 Current Time          : Jul 28 00:54:20 2015
 Time Zone             : Japan, 08:00
 Summer Time           : SUMMER, offset 60 minutes
                         Apr 2 2013 00:00 to Jun 30 2015 00:00
 Summer Time in Effect : Yes
Console#
```

Configuring SNTP

Setting the clock based on an SNTP server can provide more accurate clock synchronization across network switches than manually-configured time. To configure SNTP, set the switch as an SNTP client, and then set the polling interval, and specify a time server as shown in the following example.

```
Console(config)#sntp client
Console(config)#sntp poll 60
Console(config)#sntp server 10.1.0.19
Console(config)#exit
Console#show sntp
Current Time   : Apr  2 16:06:07 2013
Poll Interval  : 60 seconds
Current Mode   : Unicast
SNTP Status    : Enabled
SNTP Server    : 10.1.0.19
Current Server : 10.1.0.19
Console#
```

Configuring NTP

Requesting the time from a an NTP server is the most secure method. You can enable NTP authentication to ensure that reliable updates are received from only authorized NTP servers. The authentication keys and their associated key number must be centrally managed and manually distributed to NTP servers and clients. The key numbers and key values must match on both the server and client.

When more than one time server is configured, the client will poll all of the time servers, and compare the responses to determine the most reliable and accurate time update for the switch.

To configure NTP time synchronization, enter commands similar to the following.

```
Console(config)#ntp client
Console(config)#ntp authentication-key 45 md5 thisiskey45
Console(config)#ntp authenticate
Console(config)#ntp server 192.168.3.20
Console(config)#ntp server 192.168.3.21
Console(config)#ntp server 192.168.5.23 key 19
Console(config)#exit
Console#show ntp
Current Time             : May 24 03:45:57 2017
Polling                  : 1024 seconds
Current Mode             : unicast
NTP Status               : Enabled
NTP Authenticate Status  : Enabled
Last Update NTP Server   : 192.168.3.20        Port: 123
Last Update Time         : Mar 12 02:41:01 2013 UTC
NTP Server 192.168.0.88 version 3
NTP Server 192.168.3.21 version 3
NTP Server 192.168.4.22 version 3 key 19
NTP Authentication Key 19 md5 42V68751663T6K11P2J307210R885

Console#
```

Section II

Command Line Interface

This section provides a detailed description of the Command Line Interface, along with examples for all of the commands.

This section includes these chapters:

- "Using the Command Line Interface" on page 65
- "General Commands" on page 77
- "System Management Commands" on page 85
- "SNMP Commands" on page 159
- "Remote Monitoring Commands" on page 185
- "Flow Sampling Commands" on page 193
- "Authentication Commands" on page 199
- "General Security Measures" on page 259
- "Access Control Lists" on page 325
- "Interface Commands" on page 349
- "Link Aggregation Commands" on page 379
- "Port Mirroring Commands" on page 393
- "Congestion Control Commands" on page 403
- "Loopback Detection Commands" on page 407
- "Address Table Commands" on page 413
- "Spanning Tree Commands" on page 419

- "VLAN Commands" on page 449
- "ERPS Commands" on page 479
- "Class of Service Commands" on page 511
- "Quality of Service Commands" on page 523
- "Multicast Filtering Commands" on page 535
- "LLDP Commands" on page 595
- "Domain Name Service Commands" on page 619
- "DHCP Commands" on page 629
- "IP Interface Commands" on page 641
- "IP Routing Commands" on page 679

2 Using the Command Line Interface

This chapter describes how to use the Command Line Interface (CLI).

Note: You can only access the console interface through the Master unit in the stack.

Accessing the CLI

When accessing the management interface for the switch over a direct connection to the server's console port, or via a Telnet or Secure Shell connection (SSH), the switch can be managed by entering command keywords and parameters at the prompt. Using the switch's command-line interface (CLI) is very similar to entering commands on a UNIX system.

Console Connection

To access the switch through the console port, perform these steps:

1. At the console prompt, enter the user name and password. (The default user names are "admin" and "guest" with corresponding passwords of "admin" and "guest.") When the administrator user name and password is entered, the CLI displays the "Console#" prompt and enters privileged access mode (i.e., Privileged Exec). But when the guest user name and password is entered, the CLI displays the "Console>" prompt and enters normal access mode (i.e., Normal Exec).

2. Enter the necessary commands to complete your desired tasks.

3. When finished, exit the session with the "quit" or "exit" command.

After connecting to the system through the console port, the login screen displays:

```
User Access Verification

Username: admin
Password:
  CLI session with the GEL-5261 is opened.
  To end the CLI session, enter [Exit].

Console#
```

Telnet Connection

Telnet operates over the IP transport protocol. In this environment, your management station and any network device you want to manage over the network must have a valid IP address. Valid IP addresses consist of four numbers, 0 to 255, separated by periods. Each address consists of a network portion and host portion. For example, the IP address assigned to this switch, 10.1.0.1, consists of a network portion (10.1.0) and a host portion (1).

Note: The IP address for this switch is obtained via DHCP by default.

To access the switch through a Telnet session, you must first set the IP address for the Master unit, and set the default gateway if you are managing the switch from a different IP subnet. For example,

```
Console(config)#interface vlan 1
Console(config-if)#ip address 10.1.0.254 255.255.255.0
Console(config-if)#exit
Console(config)#ip default-gateway 10.1.0.254
Console(config)#
```

If your corporate network is connected to another network outside your office or to the Internet, you need to apply for a registered IP address. However, if you are attached to an isolated network, then you can use any IP address that matches the network segment to which you are attached.

After you configure the switch with an IP address, you can open a Telnet session by performing these steps:

1. From the remote host, enter the Telnet command and the IP address or host name of the device you want to access.
2. At the prompt, enter the user name and system password. The CLI will display the "Vty-*n*#" prompt for the administrator to show that you are using privileged access mode (i.e., Privileged Exec), or "Vty-*n*>" for the guest to show that you are using normal access mode (i.e., Normal Exec), where *n* indicates the number of the current Telnet session.
3. Enter the necessary commands to complete your desired tasks.
4. When finished, exit the session with the "quit" or "exit" command.

After entering the Telnet command, the login screen displays:

```
Username: admin
Password:

  CLI session with the GEL-5261 is opened.
  To end the CLI session, enter [Exit].

Vty-0#
```

Note: You can open up to eight sessions to the device via Telnet or SSH.

Entering Commands

This section describes how to enter CLI commands.

Keywords and Arguments

A CLI command is a series of keywords and arguments. Keywords identify a command, and arguments specify configuration parameters. For example, in the command "show interfaces status ethernet 1/5," **show interfaces** and **status** are keywords, **ethernet** is an argument that specifies the interface type, and **1/5** specifies the unit/port.

You can enter commands as follows:

- To enter a simple command, enter the command keyword.
- To enter multiple commands, enter each command in the required order. For example, to enable Privileged Exec command mode, and display the startup configuration, enter the following commands. The default password "super" is used to change from Normal Exec to Privileged Exec mode:

```
Console>enable
Password:
Console#show startup-config
```

- To enter commands that require parameters, enter the required parameters after the command keyword. For example, to set a password for the administrator, enter:

```
Console(config)#username admin password 0 smith
```

Minimum Abbreviation

The CLI will accept a minimum number of characters that uniquely identify a command. For example, the command "configure" can be entered as **con**. If an entry is ambiguous, the system will prompt for further input.

Command Completion

If you terminate input with a Tab key, the CLI will print the remaining characters of a partial keyword up to the point of ambiguity. In the "logging history" example, typing **log** followed by a tab will result in printing the command up to "**logging**."

Getting Help on Commands

You can display a brief description of the help system by entering the **help** command. You can also display command syntax by using the "?" character to list keywords or parameters.

Showing Commands

If you enter a "?" at the command prompt, the system will display the first level of keywords or command groups. You can also display a list of valid keywords for a specific command. For example, the command "**show system ?**" displays a list of possible show commands:

```
Console#show ?
  access-group          Access groups
  access-list           Access lists
  accounting            Uses the specified accounting list
  arp                   Information of ARP cache
  authorization         Enables EXEC accounting
  bridge-ext            Bridge extension information
  cable-diagnostics     Shows the information of cable diagnostics
  calendar              Date and time information
  class-map             Displays class maps
  cluster               Display cluster
  debug                 State of each debugging option
  dns                   DNS information
  dos-protection        Shows the system dos-protection summary information
  dot1q-tunnel          802.1Q tunnel
  dot1x                 802.1X content
  erps                  Displays ERPS configuration
  history               Shows history information
  hosts                 Host information
  interfaces            Shows interface information
  ip                    IP information
  ipv6                  IPv6 information
  lacp                  LACP statistics
  license               Show license
  line                  TTY line information
  lldp                  LLDP
  log                   Log records
  logging               Logging setting
  loopback-detection    Shows loopback detection information
  mac                   MAC access list
  mac-address-table     Configuration of the address table
  mac-vlan              MAC-based VLAN information
  management            Shows management information
  memory                Memory utilization
  network-access        Shows the entries of the secure port.
  nlm                   Show notification log
  ntp                   Network Time Protocol configuration
  policy-map            Displays policy maps
  port                  Port characteristics
  port-channel          Port channel information
  power-save            Shows the power saving information
  privilege             Shows current privilege level
  process               Device process
  protocol-vlan         Protocol-VLAN information
  public-key            Public key information
  qos                   Quality of Service
  queue                 Priority queue information
  radius-server         RADIUS server information
  reload                Shows the reload settings
  rmon                  Remote monitoring information
```

```
  rspan                  Display status of the current RSPAN configuration
  running-config         Information on the running configuration
  sflow                  Shows the sflow information
  snmp                   Simple Network Management Protocol configuration and
                         statistics
  snmp-server            Displays SNMP server configuration
  sntp                   Simple Network Time Protocol configuration
  spanning-tree          Spanning-tree configuration
  ssh                    Secure shell server connections
  startup-config         Startup system configuration
  subnet-vlan            IP subnet-based VLAN information
  system                 System information
  tacacs-server          TACACS server information
  tech-support           Technical information
  time-range             Time range
  traffic-segmentation   Traffic segmentation information
  upgrade                Shows upgrade information
  users                  Information about users logged in
  version                System hardware and software versions
  vlan                   Shows virtual LAN settings
  voice                  Shows the voice VLAN information
  watchdog               Displays watchdog status
  web-auth               Shows web authentication configuration
Console#show
```

The command "**show interfaces ?**" will display the following information:

```
Console#show interfaces ?
  brief                   Shows brief interface description
  counters                Interface counters information
  history                 Historical sample of interface counters information
  protocol-vlan           Protocol-VLAN information
  status                  Shows interface status
  switchport              Shows interface switchport information
  transceiver             Interface of transceiver information
  transceiver-threshold   Interface of transceiver-threshold information
Console#
```

Show commands which display more than one page of information (e.g., **show running-config**) pause and require you to press the [Space] bar to continue displaying one more page, the [Enter] key to display one more line, or the [a] key to display the rest of the information without stopping. You can press any other key to terminate the display.

Partial Keyword Lookup

If you terminate a partial keyword with a question mark, alternatives that match the initial letters are provided. (Remember not to leave a space between the command and question mark.) For example "**s?**" shows all the keywords starting with "s."

```
Console#show s?
sflow           snmp            snmp-server     sntp            spanning-tree
ssh             startup-config  system
Console#show s
```

Negating the Effect of Commands

For many configuration commands you can enter the prefix keyword "**no**" to cancel the effect of a command or reset the configuration to the default value. For example, the **logging** command will log system messages to a host server. To disable logging, specify the **no logging** command. This guide describes the negation effect for all applicable commands.

Using Command History

The CLI maintains a history of commands that have been entered. You can scroll back through the history of commands by pressing the up arrow key. Any command displayed in the history list can be executed again, or first modified and then executed.

Using the **show history** command displays a longer list of recently executed commands.

Understanding Command Modes

The command set is divided into Exec and Configuration classes. Exec commands generally display information on system status or clear statistical counters. Configuration commands, on the other hand, modify interface parameters or enable certain switching functions. These classes are further divided into different modes. Available commands depend on the selected mode. You can always enter a question mark "**?**" at the prompt to display a list of the commands available for the current mode. The command classes and associated modes are displayed in the following table:

Table 3: General Command Modes

Class	Mode	
Exec	Normal Privileged	
Configuration	Global*	Access Control List Class Map DHCP IGMP Profile Interface Line Multiple Spanning Tree Policy Map Time Range VLAN Database

* You must be in Privileged Exec mode to access the Global configuration mode.
You must be in Global Configuration mode to access any of the other configuration modes.

Exec Commands

When you open a new console session on the switch with the user name and password "guest," the system enters the Normal Exec command mode (or guest mode), displaying the "Console>" command prompt. Only a limited number of the commands are available in this mode. You can access all commands only from the Privileged Exec command mode (or administrator mode). To access Privilege Exec mode, open a new console session with the user name and password "admin." The

system will now display the "Console#" command prompt. You can also enter Privileged Exec mode from within Normal Exec mode, by entering the enable command, followed by the privileged level password "super."

To enter Privileged Exec mode, enter the following user names and passwords:

```
Username: admin
Password: [admin login password]

  CLI session with the GEL-5261 is opened.
  To end the CLI session, enter [Exit].

Console#
```

```
Username: guest
Password: [guest login password]

  CLI session with the GEL-5261 is opened.
  To end the CLI session, enter [Exit].

Console>enable
Password: [privileged level password]
Console#
```

Configuration Commands

Configuration commands are privileged level commands used to modify switch settings. These commands modify the running configuration only and are not saved when the switch is rebooted. To store the running configuration in non-volatile storage, use the **copy running-config startup-config** command.

The configuration commands are organized into different modes:

- Global Configuration - These commands modify the system level configuration, and include commands such as **hostname** and **snmp-server community**.
- Access Control List Configuration - These commands are used for packet filtering.
- Class Map Configuration - Creates a DiffServ class map for a specified traffic type.
- IGMP Profile - Sets a profile group and enters IGMP filter profile configuration mode.
- Interface Configuration - These commands modify the port configuration such as **speed-duplex** and **negotiation**.
- Line Configuration - These commands modify the console port and Telnet configuration, and include command such as **parity** and **databits**.

- Multiple Spanning Tree Configuration - These commands configure settings for the selected multiple spanning tree instance.
- Policy Map Configuration - Creates a DiffServ policy map for multiple interfaces.
- Time Range - Sets a time range for use by other functions, such as Access Control Lists.
- VLAN Configuration - Includes the command to create VLAN groups.

To enter the Global Configuration mode, enter the command **configure** in Privileged Exec mode. The system prompt will change to "Console(config)#" which gives you access privilege to all Global Configuration commands.

```
Console#configure
Console(config)#
```

To enter the other modes, at the configuration prompt type one of the following commands. Use the **exit** or **end** command to return to the Privileged Exec mode.

Table 4: Configuration Command Modes

Mode	Command	Prompt	Page
Access Control List	access-list arp	Console(config-arp-acl)	344
	access-list ip standard	Console(config-std-acl)	326
	access-list ip extended	Console(config-ext-acl)	326
	access-list ipv6 standard	Console(config-std-ipv6-acl)	332
	access-list ipv6 extended	Console(config-ext-ipv6-acl)	332
	access-list mac	Console(config-mac-acl)	339
Class Map	class-map	Console(config-cmap)	524
Interface	interface {ethernet *port* | port-channel *id* | vlan *id*}	Console(config-if)	350
Line	line {console | vty}	Console(config-line)	114
MSTP	spanning-tree mst-configuration	Console(config-mstp)	425
Policy Map	policy-map	Console(config-pmap)	527
Time Range	time-range	Console(config-time-range)	148
VLAN	vlan database	Console(config-vlan)	449

For example, you can use the following commands to enter interface configuration mode, and then return to Privileged Exec mode

```
Console(config)#interface ethernet 1/5
.
.
.
Console(config-if)#exit
Console(config)#
```

Command Line Processing

Commands are not case sensitive. You can abbreviate commands and parameters as long as they contain enough letters to differentiate them from any other currently available commands or parameters. You can use the Tab key to complete partial commands, or enter a partial command followed by the "?" character to display a list of possible matches. You can also use the following editing keystrokes for command-line processing:

Table 5: Keystroke Commands

Keystroke	Function
Ctrl-A	Shifts cursor to start of command line.
Ctrl-B	Shifts cursor to the left one character.
Ctrl-C	Terminates the current task and displays the command prompt.
Ctrl-E	Shifts cursor to end of command line.
Ctrl-F	Shifts cursor to the right one character.
Ctrl-K	Deletes all characters from the cursor to the end of the line.
Ctrl-L	Repeats current command line on a new line.
Ctrl-N	Enters the next command line in the history buffer.
Ctrl-P	Enters the last command.
Ctrl-R	Repeats current command line on a new line.
Ctrl-U	Deletes from the cursor to the beginning of the line.
Ctrl-W	Deletes the last word typed.
Esc-B	Moves the cursor back one word.
Esc-D	Deletes from the cursor to the end of the word.
Esc-F	Moves the cursor forward one word.
Delete key or backspace key	Erases a mistake when entering a command.

Showing Status Information

There are various "show" commands which display configuration settings or the status of specified processes. Many of these commands will not display any information unless the switch is properly configured, and in some cases the interface to which a command applies is up.

For example, if a static router port is configured, the corresponding show command will not display any information unless IGMP snooping is enabled, and the link for the static router port is up.

```
Console#configure
Console(config)#ip igmp snooping vlan 1 mrouter ethernet 1/11
Console(config)#end
Console#show ip igmp snooping mrouter
 VLAN M'cast Router Ports Type
 ---- ------------------ -------
Console#configure
```

```
Console(config)#ip igmp snooping
Console(config)#end
Console#show ip igmp snooping mrouter
 VLAN M'cast Router Ports Type
 ---- ------------------ -------
 1    Eth 1/11            Static
Console#
```

CLI Command Groups

The system commands can be broken down into the functional groups shown below.

Table 6: Command Group Index

Command Group	Description	Page
General	Basic commands for entering privileged access mode, restarting the system, or quitting the CLI	77
System Management	Display and setting of system information, basic modes of operation, maximum frame size, file management, console port and telnet settings, system logs, SMTP alerts, and the system clock	85
Simple Network Management Protocol	Activates authentication failure traps; configures community access strings, and trap receivers	159
Remote Monitoring	Supports statistics, history, alarm and event groups	185
User Authentication	Configures user names and passwords, command privilege levels, logon access using local or remote authentication, management access through the web server, Telnet server and Secure Shell; as well as port security, IEEE 802.1X port access control, and restricted access based on specified IP addresses	199
General Security Measures	Segregates traffic for clients attached to common data ports; and prevents unauthorized access by configuring valid static or dynamic addresses, MAC address authentication, filtering DHCP requests and replies, and discarding invalid ARP responses	259
Access Control List	Provides filtering for IPv4 frames (based on address, protocol, TCP/UDP port number or TCP control code), IPv6 frames (based on address, DSCP traffic class, or next header), or non-IP frames (based on MAC address or Ethernet type)	325
Interface	Configures the connection parameters for all Ethernet ports, aggregated links, and VLANs	349
Link Aggregation	Statically groups multiple ports into a single logical trunk; configures Link Aggregation Control Protocol for port trunks	379
Mirror Port	Mirrors data to another port for analysis without affecting the data passing through or the performance of the monitored port	393
Congestion Control	Sets the input/output rate limits, traffic storm thresholds, and thresholds for broadcast and multicast storms which can be used to trigger configured rate limits or to shut down a port.	403
Loopback Detection	Detects general loopback conditions caused by hardware problems or faulty protocol settings	407

Table 6: Command Group Index (Continued)

Command Group	Description	Page
Address Table	Configures the address table for filtering specified addresses, displays current entries, clears the table, or sets the aging time	413
Spanning Tree	Configures Spanning Tree settings for the switch	419
ERPS	Configures Ethernet Ring Protection Switching for increased availability of Ethernet rings commonly used in service provider networks	479
VLANs	Configures VLAN settings, and defines port membership for VLAN groups; also enables or configures private VLANs, protocol VLANs, voice VLANs, and QinQ tunneling	449
Class of Service	Sets port priority for untagged frames, selects strict priority or weighted round robin, relative weight for each priority queue, also sets priority for DSCP	511
Quality of Service	Configures Differentiated Services	523
Multicast Filtering	Configures IGMP multicast filtering, query, profile, and proxy parameters; specifies ports attached to a multicast router; also configures multicast VLAN registration, and IPv6 MLD snooping	535
Link Layer Discovery Protocol	Configures LLDP settings to enable information discovery about neighbor devices	595
Domain Name Service	Configures DNS services.	619
Dynamic Host Configuration Protocol	Configures DHCP client and relayfunctions	629
IP Interface	Configures IP address for the switch interfaces; also configures ARP parameters	641
IP Routing	Configures static and dynamic unicast routing	679
Debug	Displays debugging information for all key functions These commands are not described in this manual. Please refer to the prompt messages included in the CLI interface.	

The access mode shown in the following tables is indicated by these abbreviations:

ACL (Access Control List Configuration)
CM (Class Map Configuration)
ERPS (Ethernet Ring Protection Switching Configuration)
GC (Global Configuration)
IC (Interface Configuration)
IPC (IGMP Profile Configuration)
LC (Line Configuration)
MST (Multiple Spanning Tree)
NE (Normal Exec)
PE (Privileged Exec)
PM (Policy Map Configuration)
VC (VLAN Database Configuration)

3 General Commands

The general commands are used to control the command access mode, configuration mode, and other basic functions.

Table 7: General Commands

Command	Function	Mode
prompt	Customizes the CLI prompt	GC
reload	Restarts the system at a specified time, after a specified delay, or at a periodic interval	GC
enable	Activates privileged mode	NE
quit	Exits a CLI session	NE, PE
show history	Shows the command history buffer	NE, PE
configure	Activates global configuration mode	PE
disable	Returns to normal mode from privileged mode	PE
reload	Restarts the system immediately	PE
show reload	Displays the current reload settings, and the time at which next scheduled reload will take place	PE
end	Returns to Privileged Exec mode	any config. mode
exit	Returns to the previous configuration mode, or exits the CLI	any mode
help	Shows how to use help	any mode
?	Shows options for command completion (context sensitive)	any mode

prompt

This command customizes the CLI prompt. Use the **no** form to restore the default prompt.

Syntax

prompt *string*

no prompt

string - Any alphanumeric string to use for the CLI prompt. (Maximum length: 255 characters)

Default Setting

Console

Command Mode
Global Configuration

Command Usage
This command and the hostname command can be used to set the command line prompt as shown in the example below. Using the **no** form of either command will restore the default command line prompt.

Example

```
Console(config)#prompt RD2
RD2(config)#
```

reload
(Global Configuration)

This command restarts the system at a specified time, after a specified delay, or at a periodic interval. You can reboot the system immediately, or you can configure the switch to reset after a specified amount of time. Use the **cancel** option to remove a configured setting.

Syntax

reload {**at** *hour minute* [{*month day* | *day month*} [*year*]] | **in** {**hour** *hours* | **minute** *minutes* | **hour** *hours* **minute** *minutes*} | **regulary** *hour minute* [**period** {**daily** | **weekly** *day-of-week* | **monthly** *day-of-month*}] | **cancel** [**at** | **in** | **regulary**]}

reload at - A specified time at which to reload the switch.

hour - The hour at which to reload. (Range: 0-23)

minute - The minute at which to reload. (Range: 0-59)

month - The month at which to reload. (january ... december)

day - The day of the month at which to reload. (Range: 1-31)

year - The year at which to reload. (Range: 1970-2037)

reload in - An interval after which to reload the switch.

hours - The number of hours, combined with the minutes, before the switch resets. (Range: 0-576)

minutes - The number of minutes, combined with the hours, before the switch resets. (Range: 0-59)

reload regulary - A periodic interval at which to reload the switch.

hour - The hour at which to reload. (Range: 0-23)

minute - The minute at which to reload. (Range: 0-59)

day-of-week - Day of the week at which to reload. (Range: monday ... saturday)

day-of-month - Day of the month at which to reload. (Range: 1-31)

reload cancel - Cancels the specified reload option.

Default Setting
None

Command Mode
Global Configuration

Command Usage
- This command resets the entire system.
- Any combination of reload options may be specified. If the same option is re-specified, the previous setting will be overwritten.
- When the system is restarted, it will always run the Power-On Self-Test. It will also retain all configuration information stored in non-volatile memory by the copy running-config startup-config command (See "copy" on page 102).

Example
This example shows how to reset the switch after 30 minutes:

```
Console(config)#reload in minute 30
***
*** --- Rebooting at January  1 02:10:43 2016 ---
***

Are you sure to reboot the system at the specified time? <y/n>
```

enable

This command activates Privileged Exec mode. In privileged mode, additional commands are available, and certain commands display additional information. See "Understanding Command Modes" on page 70.

Syntax

enable [*level*]

level - Privilege level to log into the device.

The device has two predefined privilege levels: 0: Normal Exec, 15: Privileged Exec. Enter level 15 to access Privileged Exec mode.

Default Setting
Level 15

Command Mode
Normal Exec

Command Usage
- "super" is the default password required to change the command mode from Normal Exec to Privileged Exec. (To set this password, see the enable password command.)

- The "#" character is appended to the end of the prompt to indicate that the system is in privileged access mode.

Example

```
Console>enable
Password: [privileged level password]
Console#
```

Related Commands

disable (82)
enable password (200)

quit

This command exits the configuration program.

Default Setting

None

Command Mode

Normal Exec, Privileged Exec

Command Usage

The **quit** and **exit** commands can both exit the configuration program.

Example

This example shows how to quit a CLI session:

```
Console#quit

Press ENTER to start session

User Access Verification

Username:
```

show history

This command shows the contents of the command history buffer.

Default Setting

None

Command Mode

Normal Exec, Privileged Exec

Command Usage

The history buffer size is fixed at 10 Execution commands and 10 Configuration commands.

Example

In this example, the show history command lists the contents of the command history buffer:

```
Console#show history
Execution command history:
 2 config
 1 show history

Configuration command history:
 4 interface vlan 1
 3 exit
 2 interface vlan 1
 1 end

Console#
```

The **!** command repeats commands from the Execution command history buffer when you are in Normal Exec or Privileged Exec Mode, and commands from the Configuration command history buffer when you are in any of the configuration modes. In this example, the **!2** command repeats the second command in the Execution history buffer (**config**).

```
Console#!2
Console#config
Console(config)#
```

configure

This command activates Global Configuration mode. You must enter this mode to modify any settings on the switch. You must also enter Global Configuration mode prior to enabling some of the other configuration modes, such as Interface Configuration, Line Configuration, and VLAN Database Configuration. See "Understanding Command Modes" on page 70.

Default Setting

None

Command Mode

Privileged Exec

Example

```
Console#configure
Console(config)#
```

Related Commands

end (83)

disable

This command returns to Normal Exec mode from privileged mode. In normal access mode, you can only display basic information on the switch's configuration or Ethernet statistics. To gain access to all commands, you must use the privileged mode. See "Understanding Command Modes" on page 70.

Default Setting
None

Command Mode
Privileged Exec

Command Usage
The ">" character is appended to the end of the prompt to indicate that the system is in normal access mode.

Example

```
Console#disable
Console>
```

Related Commands
enable (79)

reload (Privileged Exec)

This command restarts the system.

Note: When the system is restarted, it will always run the Power-On Self-Test. It will also retain all configuration information stored in non-volatile memory by the copy running-config startup-config command.

Default Setting
None

Command Mode
Privileged Exec

Command Usage
This command resets the entire system.

Example
This example shows how to reset the switch:

```
Console#reload
System will be restarted, continue <y/n>? y
```

show reload

This command displays the current reload settings, and the time at which next scheduled reload will take place.

Command Mode

Privileged Exec

Example

```
Console#show reload
Reloading switch in time:                        0 hours 29 minutes.

The switch will be rebooted at January  1 02:11:50 2015.
Remaining Time: 0 days, 0 hours, 29 minutes, 52 seconds.
Console#
```

end

This command returns to Privileged Exec mode.

Default Setting

None

Command Mode

Global Configuration, Interface Configuration, Line Configuration, VLAN Database Configuration, and Multiple Spanning Tree Configuration.

Example

This example shows how to return to the Privileged Exec mode from the Interface Configuration mode:

```
Console(config-if)#end
Console#
```

exit

This command returns to the previous configuration mode or exits the configuration program.

Default Setting

None

Command Mode

Any

Example

This example shows how to return to the Privileged Exec mode from the Global Configuration mode, and then quit the CLI session:

```
Console(config)#exit
Console#exit

Press ENTER to start session

User Access Verification

Username:
```

4 System Management Commands

The system management commands are used to control system logs, passwords, user names, management options, and display or configure a variety of other system information.

Table 8: System Management Commands

Command Group	Function
Device Designation	Configures information that uniquely identifies this switch
System Status	Displays system configuration, active managers, and version information
Fan Control	Forces fans to full speed
Frame Size	Enables support for jumbo frames
File Management	Manages code image or switch configuration files
Line	Sets communication parameters for the serial port, including baud rate and console time-out
Event Logging	Controls logging of error messages
SMTP Alerts	Configures SMTP email alerts
Time (System Clock)	Sets the system clock automatically via NTP/SNTP server or manually
Time Range	Sets a time range for use by other functions, such as Access Control Lists
Switch Clustering	Configures management of multiple devices via a single IP address

Device Designation

This section describes commands used to configure information that uniquely identifies the switch.

Table 9: Device Designation Commands

Command	Function	Mode
hostname	Specifies the host name for the switch	GC
snmp-server contact	Sets the system contact string	GC
snmp-server location	Sets the system location string	GC

hostname

This command specifies or modifies the host name for this device. Use the **no** form to restore the default host name.

Syntax

hostname *name*

no hostname

name - The name of this host. (Maximum length: 255 characters)

Default Setting

None

Command Mode

Global Configuration

Command Usage

- The host name specified by this command is displayed by the show system command and on the Show > System web page.
- This command and the prompt command can be used to set the command line prompt as shown in the example below. Using the **no** form of either command will restore the default command line prompt.

Example

```
Console(config)#hostname RD#1
Console(config)#
```

System Status

This section describes commands used to display system information.

Table 10: System Status Commands

Command	Function	Mode
show access-list tcam-utilization	Shows utilization parameters for TCAM	PE
show license file	Shows information on the installed license file required for the network ports	PE
show memory	Shows memory utilization parameters	PE
show process cpu	Shows CPU utilization parameters	PE
show process cpu guard	Shows the CPU utilization watermark and threshold	NE
show process cpu task	Shows CPU utilization per process	PE
show running-config	Displays the configuration data currently in use	PE

Table 10: System Status Commands (Continued)

Command	Function	Mode
show startup-config	Displays the contents of the configuration file (stored in flash memory) that is used to start up the system	PE
show system	Displays system information	NE, PE
show tech-support	Displays a detailed list of system settings designed to help technical support resolve configuration or functional problems	PE
show users	Shows all active console and Telnet sessions, including user name, idle time, and IP address of Telnet clients	NE, PE
show version	Displays version information for the system	NE, PE
show watchdog	Shows if watchdog debugging is enabled	PE
watchdog software	Monitors key processes, and automatically reboots the system if any of these processes are not responding correctly	PE

show access-list tcam-utilization

This command shows utilization parameters for TCAM (Ternary Content Addressable Memory), including the number policy control entries in use, and the number of free entries.

Command Mode

Privileged Exec

Command Usage

Policy control entries (PCEs) are used by various system functions which rely on rule-based searches, including Access Control Lists (ACLs), IP Source Guard filter rules, Quality of Service (QoS) processes, or traps.

For example, when binding an ACL to a port, each rule in an ACL will use two PCEs; and when setting an IP Source Guard filter rule for a port, the system will also use two PCEs.

Example

```
Console#show access-list tcam-utilization
Pool capability code:
  AM - MAC ACL, A4 - IPv4 ACL, A6S - IPv6 Standard ACL,
  A6E - IPv6 extended ACL, DM - MAC diffServ, D4 - IPv4 diffServ,
  D6S - IPv6 standard diffServ, D6E - IPv6 extended diffServ,
  AEM - Egress MAC ACL, AE4 - Egress IPv4 ACL,
  AE6S - Egress IPv6 standard ACL, AE6E - Egress IPv6 extended ACL,
  DEM - Egress MAC diffServ, DE4 - Egress IPv4 diffServ,
  DE6S - Egress IPv6 standard diffServ,
  DE6E - Egress IPv6 extended diffServ, W - Web authentication,
  I - IP source guard, C - CPU interface, L - Link local,
  MV - Mac based VLAN, PV - Protocol based VLAN, VV - Voice VLAN,
  R - Routing, QINQ - QinQ, Reserved - Reserved,
  ALL - All supported function,

Unit Device Pool Total Used  Free  Capability
---- ------ ---- ----- ----- ----- ----------------------------------------
   1      0    0   128   128     0 R
```

```
  1      0    1    64     0    64 A6S A6E
  1      0    2   128     0   128 A4
  1      0    3   128     0   128 AM
  1      0    4    64     0    64 D6S D6E
  1      0    5   128     0   128 D4 W
  1      0    6   128     0   128 DM
  1      0    7   128     0   128 MV PV VV
  1      0    8    64     0    64 I
  1      0    9    64    64     0 Reserved
  1      0   10    64    64     0 C
  1      0   11    64    64     0 C L

Console#
```

Table 11: show access-list tcam-utilization - display description

Field	Description
Pool Capability Code	Abbreviation for processes shown in the TCAM List.
Unit	Stack unit identifier.
Device	Memory chip used for indicated pools.
Pool	Rule slice (or call group). Each slice has a fixed number of rules that are used for the specified features.
Total	The maximum number of policy control entries allocated to the each pool.
Used	The number of policy control entries used by the operating system.
Free	The number of policy control entries available for use.
Capability	The processes assigned to each pool.

show license file

This command shows information on the license file used to enable the network ports.

Command Mode

Privileged Exec

Example

```
Console#show license file
Accept-Mode: legacy
License-Number: ffceab69-5d19-4eb9-bdfe-2ef36e5df144
License-Issue-Date: Thu Jun  8 08:10:38 2017
License-Access-List: s/
gf5zGdtiN8WPaSgQEPBm7WsU0MvylPKyKIC0mfIjbeCRz1GrK1TVm3IB
Yk9QLzbZl2Yq5OfZyseMpOszYpRFmxD969aLn9oWFYfUAX9pZi2KRp+A6m+PwYYaABDFw5NxoumC
yqS0vvZO63d8jpvoZMuBu+C69uIHmGw0dWKjtGwHty5xWDfMY44LvZbfktH7vTmVgnm/Ty/mSwll
lJd FtWTPfC7rRzXcngfiiMUmbJs=
Signature1: ImNS2m9IqBDVxzTsw+PZnHvFC6Z+irLIDylJNWPn65Lpv/AtxzmEAAhPrXgHJk4P9
VcNnYGmJ6CB0X9jnWYox86W5RCB6p+HbC7MFDY0gtUFmfNz16th+DaWOi+m2gAvc5Y/mXS9l/LZt
9Kcm4EfBi7Qxv2r0qayPu/QN9LMqOAi0RFs48Rz752fCwnCWgUYtgzI9YnK/Eq3lsWDC+w7y2CDS
vF/5IWGvr2xF5QFXJM8UG7BmK6A1fED/4CBjxwCgjRdTC/EAAllBN1/rHNNVGE82b6RhcBbmpgay
ijNc+ouARNguSIQdNfL8OrE7EdB3xLuxqw0WkAkLxvLMdJwtA==
Signature2: Gnd3p8D/
TuSee5ol1s3TF3fuGazqWaqYSy270I97Syoaztq3DfsAtd0NPoVOabb8iWqIGFqy43ieDkIaYB+E
```

```
pTZkUY8vFt6JOiIDsPQLrzu8W+HU6xcX9YS0UmBisZoSHSu+eJeHzpGupwdYhccOQ5gL2O5YK9f1
LGjsQz8sjHVwaa7u7NsOu26zt1XGrwq1Pj5jIzJc6uJ7QZBicjqbpqhNyUM9vmx2qnwYALfz2k8e
4IEsim3NrkleEkMcJTcHk7KiAkat5sEq83vgOoA0l+m/4fGC8Gmw84LPhSbeHwZDqY8Ziedt
tfX9IYDhU1DMh7ZlhMXsDVOWv+WQVYi22Q==

Console#
```

show memory

This command shows memory utilization parameters, and alarm thresholds.

Command Mode

Normal Exec, Privileged Exec

Command Usage

This command shows the amount of memory currently free for use, the amount of memory allocated to active processes, the total amount of system memory, and the alarm thresholds.

Example

```
Console#show memory
 Status Bytes      %
 ------ ---------- ---
 Free    111706112  41
 Used    156729344  59
 Total   268435456

 Alarm Configuration
  Rising Threshold         : 95%
  Falling Threshold        : 90%

Console#
```

Related Commands

memory (180)

show process cpu

This command shows the CPU utilization parameters, alarm status, and alarm thresholds.

Command Mode

Normal Exec, Privileged Exec

Example

```
Console#show process cpu
 CPU Utilization in the past 5 seconds : 24%

 CPU Utilization in the past 60 seconds
  Average Utilization      : 24%
  Maximum Utilization      : 25%

 Alarm Status
  Current Alarm Status     : Off
```

```
  Last Alarm Start Time    : Dec 31 00:00:19 2000
  Last Alarm Duration Time : 15 seconds

 Alarm Configuration
  Rising Threshold         : 90%
  Falling Threshold        : 70%

Console#
```

Related Commands

process cpu (181)

show process cpu guard

This command shows the CPU utilization watermark and threshold settings.

Command Mode

Normal Exec, Privileged Exec

Example

```
Console#show process cpu guard
 CPU Guard Configuration
  Status            : Disabled
  High Watermark    : 90%
  Low Watermark     : 70%
  Maximum Threshold : 300 packets per second
  Minimum Threshold : 50 packets per second
  Trap Status       : Disabled
 CPU Guard Operation
  Current Threshold : 300 packets per second

Console#
```

Table 12: show process cpu guard - display description

Field	Description
CPU Guard Configuration	
Status	Shows if CPU Guard has been enabled.
High Watermark	If the percentage of CPU usage time is higher than the high-watermark, the switch stops packet flow to the CPU (allowing it to catch up with packets already in the buffer) until usage time falls below the low watermark.
Low Watermark	If packet flow has been stopped after exceeding the high watermark, normal flow will be restored after usage falls beneath the low watermark.
Maximum Threshold	If the number of packets being processed by the CPU is higher than the maximum threshold, the switch stops packet flow to the CPU (allowing it to catch up with packets already in the buffer) until the number of packets being processed falls below the minimum threshold.
Minimum Threshold	If packet flow has been stopped after exceeding the maximum threshold, normal flow will be restored after usage falls beneath the minimum threshold.
Trap Status	Shows if an alarm message will be generated when utilization exceeds the high watermark or exceeds the maximum threshold.

Table 12: show process cpu guard - display description (Continued)

Field	Description
CPU Guard Operation	
Current Threshold	Shows the configured threshold in packets per second.

Related Commands

process cpu guard (182)

show process cpu task

This command shows the CPU utilization per process.

Command Mode

Privileged Exec

Example

```
Console#show process cpu task
Task            Util (%) Avg (%)  Max (%)
--------------- -------- -------- --------
AMTR_ADDRESS        0.00     0.00     0.00
AMTRL3              0.00     0.00     0.00
AMTRL3_GROUP        0.00     0.00     0.00
APP_PROTOCOL_PR     0.00     0.00     0.00
AUTH_GROUP          0.00     0.00     0.00
AUTH_PROC           0.00     0.00     0.00
BGP_TD              0.00     0.00     0.00
CFGDB_TD            0.00     0.00     0.00
CFM_GROUP           0.00     0.00     0.00
CLITASK0            0.00     0.00     0.00
CORE_UTIL_PROC      0.00     0.00     0.00
DHCPSNP_GROUP       0.00     0.00     0.00
DOT1X_SUP_GROUP     0.00     0.00     0.00
DRIVER_GROUP        1.00     0.75     2.00
DRIVER_GROUP_FR     0.00     0.00     0.00
DRIVER_GROUP_TX     0.00     0.00     0.00
FS                  0.00     0.00     0.00
HTTP_TD             0.00     0.00     5.00
HW_WTDOG_TD         0.00     0.00     0.00
IML_TX              0.00     0.00     0.00
IP_SERVICE_GROU     0.00     0.00     0.00
KEYGEN_TD           0.00     0.00     0.00
L2_L4_PROCESS       0.00     0.00     4.00
L2MCAST_GROUP       0.00     0.00     0.00
L2MUX_GROUP         0.00     0.00     0.00
L4_GROUP            0.00     0.00     0.00
LACP_GROUP          0.00     0.00     0.00
MSL_TD              0.00     0.00     0.00
NETACCESS_GROUP     0.00     0.00     0.00
NETACCESS_NMTR      0.00     0.25     2.00
NETCFG_GROUP        0.00     0.00     0.00
NETCFG_PROC         0.00     0.08     1.00
NIC                 0.00     0.00     0.00
NMTRDRV             1.00     1.66     4.00
NSM_GROUP           0.00     0.00     0.00
NSM_PROC            0.00     0.00     0.00
NSM_TD              0.00     0.00     0.00
OSPF6_TD            0.00     0.00     0.00
OSPF_TD             0.00     0.00     0.00
```

```
PIM_GROUP            0.00      0.00      0.00
PIM_PROC             0.00      0.00      0.00
PIM_SM_TD            0.00      0.00      0.00
POE_PROC             0.00      0.00      0.00
RIP_TD               0.00      0.00      0.00
SNMP_GROUP           0.00      0.00      0.00
SNMP_TD              0.00      0.00      0.00
SSH_GROUP            0.00      0.00      0.00
SSH_TD               0.00      0.00      0.00
STA_GROUP            0.00      0.00      0.00
STKCTRL_GROUP        0.00      0.00      0.00
STKTPLG_GROUP        0.00      0.00      0.00
SWCTRL_GROUP         0.00      0.00      0.00
SWCTRL_TD            0.00      0.00      0.00
SWDRV_MONITOR       21.00     19.25     21.00
SYS_MGMT_PROC        0.00      0.00      0.00
SYSDRV               0.00      0.00      0.00
SYSLOG_TD            0.00      0.00      0.00
SYSMGMT_GROUP        0.00      0.00      0.00
SYSTEM               0.00      0.00      0.00
UDLD_GROUP           0.00      0.00      0.00
WTDOG_PROC           0.00      0.00      0.00
XFER_GROUP           0.00      0.00      0.00
XFER_TD              0.00      0.00      0.00

Console#
```

show running-config

This command displays the configuration information currently in use.

Syntax

show running-config [**interface** *interface*]

interface

ethernet *unit/port*

unit - Unit identifier. (Range: 1)

port - Port number. (Range: 1-52)

port-channel *channel-id* (Range: 1-8)

vlan *vlan-id* (Range: 1-4094)

Command Mode

Privileged Exec

Command Usage

- Use the **interface** keyword to display configuration data for the specified interface.
- Use this command in conjunction with the **show startup-config** command to compare the information in running memory to the information stored in non-volatile memory.

- This command displays settings for key command modes. Each mode group is separated by "!" symbols, and includes the configuration mode command, and corresponding commands. This command displays the following information:
  - MAC address for
  - SNMP community strings
  - Users (names, access levels, and encrypted passwords)
  - VLAN database (VLAN ID, name and state)
  - VLAN configuration settings for each interface
  - Multiple spanning tree instances (name and interfaces)
  - IP address configured for VLANs
  - Spanning tree settings
  - Interface settings
  - Any configured settings for the console port and Telnet
- For security reasons, user passwords are only displayed in encrypted format.

Example

```
Console#show running-config
!<stackingDB>00</stackingDB>
!<stackingMac>01_00-e0-0c-00-00-fd_03</stackingMac>
!
snmp-server community public ro
snmp-server community private rw
!
enable password 7 1b3231655cebb7a1f783eddf27d254ca
!
vlan database
 VLAN 1 name DefaultVlan media ethernet
!
spanning-tree mst configuration
!
interface ethernet 1/1
 no negotiation
...
interface ethernet 1/52
 no negotiation
!
interface vlan 1
 ip address dhcp
!
interface vlan 1
!
line console
!
line vty
!
end
!
Console#
```

Related Commands

show startup-config (94)

show startup-config

This command displays the configuration file stored in non-volatile memory that is used to start up the system.

Command Mode

Privileged Exec

Command Usage

- Use this command in conjunction with the **show running-config** command to compare the information in running memory to the information stored in non-volatile memory.

- This command displays settings for key command modes. Each mode group is separated by "!" symbols, and includes the configuration mode command, and corresponding commands. This command displays the following information:
  - MAC address for
  - SNMP community strings
  - SNMP trap authentication
  - Users (names and access levels)
  - VLAN database (VLAN ID, name and state)
  - Multiple spanning tree instances (name and interfaces)
  - Interface settings and VLAN configuration settings for each interface
  - IP address for VLANs
  - Any configured settings for the console port and Telnet

Example

Refer to the example for the running configuration file.

Related Commands

show running-config (92)

show system

This command displays system information.

Default Setting

None

Command Mode

Normal Exec, Privileged Exec

Example

```
Console#show system
System Description : GEL-5261
System OID String  : 1.3.6.1.4.1.22426.44.101
System Information
 System Up Time         : 0 days, 0 hours, 28 minutes, and 37.8 seconds
 System Name            :
 System Location        :
 System Contact         :
 MAC Address (Unit 1)   : CC-37-AB-A1-06-C0
```

```
 Web Server              : Enabled
 Web Server Port         : 80
 Web Secure Server       : Enabled
 Web Secure Server Port  : 443
 Telnet Server           : Enabled
 Telnet Server Port      : 23
 Jumbo Frame             : Disabled

System Fan:
 Force Fan Speed Full    : Disabled
Unit 1
 Fan 1: Ok
Console#
```

Table 13: show system – display description

Parameter	Description
System Description	Brief description of device type.
System OID String	MIB II object ID for switch's network management subsystem.
System Up Time	Length of time the management agent has been up.
System Name	Name assigned to the switch system.
System Location	Specifies the system location.
System Contact	Administrator responsible for the system.
MAC Address	MAC address assigned to this switch.
Web Server/Port	Shows administrative status of web server and UDP port number.
Web Secure Server/Port	Shows administrative status of secure web server and UDP port number.
Telnet Server/Port	Shows administrative status of Telnet server and TCP port number.
Jumbo Frame	Shows if jumbo frames are enabled or disabled.
System Fan	Shows if forced full-speed mode is enabled.

show tech-support

This command displays a detailed list of system settings designed to help technical support resolve configuration or functional problems.

Command Mode

Normal Exec, Privileged Exec

Command Usage

This command generates a long list of information including detailed system and interface settings. It is therefore advisable to direct the output to a file using any suitable output capture function provided with your terminal emulation program.

Example

```
User Access Verification

Username: admin
```

```
Password:

      CLI session with the GEL-5261 is opened.

      To end the CLI session, enter [Exit].

Vty-2#show tech-support
dir:
File Name                      Type    Startup Modified Time       Size (bytes)
------------------------------ ------- ------- ------------------- ------------
 Unit 1:
Level1-5261_V1.1.10a.171.bix   OpCode  Y       2016-12-09 13:18:40      8646920
Factory_Default_Config.cfg     Config  N       2017-05-24 02:57:11          476
startup1.cfg                   Config  N       2016-06-30 13:36:34         4559
startup2.cfg                   Config  Y       2016-07-06 11:21:04         4537
-------------------------------------------------------------------------------
                                   Free space for user config files:    2611868
                                                         Total space:      32 MB

show arp:

IP Address      MAC Address       Type      Interface
--------------- ----------------- --------- -----------
192.168.2.14    CC-37-AB-A1-06-C0 other     VLAN1
192.168.2.99    00-E0-4C-68-12-66 dynamic   VLAN1

Total entry : 2

show interfaces brief:
Interface Name              Status    PVID Pri Speed/Duplex  Type         Trunk
--------- ----------------- --------- ---- --- ------------- ------------ -----
Eth 1/ 1                    Up           1   0 Auto-1000full 1000BASE-T   None
Eth 1/ 2                    Up           1   0 Auto          1000BASE-T   None
Eth 1/ 3                    Up           1   0 Auto          1000BASE-T   None
Eth 1/ 4                    Up           1   0 Auto          1000BASE-T   None
Eth 1/ 5                    Up           1   0 Auto          1000BASE-T   None
...
```

show users

Shows all active console and Telnet sessions, including user name, idle time, and IP address of Telnet client.

Default Setting

None

Command Mode

Normal Exec, Privileged Exec

Command Usage

The session used to execute this command is indicated by a "*" symbol next to the Line (i.e., session) index number.

Example

```
Console#show users
User Name Accounts:
User Name            Privilege  Public-Key
-------------------- ---------- ---------------
admin                        15 None
```

```
guest                          0 None

Online Users:
Line      Session ID User Name            Idle Time (h:m:s) Remote IP Addr
--------- ---------- -------------------- ----------------- -----------------
*Console           0 admin                          0:00:01

Web Online Users:
Line       User Name            Idle Time (h:m:s)    Remote IP Addr
---------- -------------------- -------------------- --------------------

Console#
```

show version

This command displays hardware and software version information for the system.

Command Mode

Normal Exec, Privileged Exec

Example

```
Console#show version
 Serial Number          : EC1602001353
 Hardware Version       : R0A
 Number of Ports        : 52
 Main Power Status      : Up
 Role                   : Master
 Loader Version         : 1.0.0.4
 Linux Kernel Version   : 2.6.19
 Operation Code Version : 1.1.10a.171

Console#
```

Table 14: show version – display description

Parameter	Description
Serial Number	The serial number of the switch.
Hardware Version	Hardware version of the main board.
Number of Ports	Number of built-in ports.
Main Power Status	Displays the status of the internal power supply.
Role	Shows that this switch is operating as Master or Slave.
Loader Version	Version number of loader code.
Linux Kernel Version	Version number of Linux kernel.
Operation Code Version	Version number of runtime code.

show watchdog

This command shows if watchdog debugging is enabled.

Command Mode

Privileged Exec

Example

```
Console#show watchdog
Software Watchdog Information
 Status :    Enabled
 AutoReload :    Enabled
Console#
```

watchdog software

This command monitors key processes, and automatically reboots the system if any of these processes are not responding correctly.

Syntax

watchdog software {**disable** | **enable**}

Default Setting

Disabled

Command Mode

Privileged Exec

Example

```
Console#watchdog software disable
Console#
```

Fan Control

This section describes the command used to force fan speed for the GEL-5261.

Table 15: Fan Control Commands

Command	Function	Mode
fan-speed force-full	Forces fans to full speed	GC
show system	Shows if full fan speed is enabled	NE, PE

fan-speed force-full

This command sets all fans to full speed. Use the no form to reset the fans to normal operating speed.

Syntax

[no] fan-speed force-full

Default Setting

Normal speed

Command Mode

Global Configuration

Example

```
Console(config)#fan-speed force-full
Console(config)#
```

Frame Size

This section describes commands used to configure the Ethernet frame size on the switch.

Table 16: Frame Size Commands

Command	Function	Mode
jumbo frame	Enables support for jumbo frames	GC

jumbo frame

This command enables support for layer 2 jumbo frames for Gigabit and 10 Gigabit Ethernet ports. Use the **no** form to disable it.

Syntax

[**no**] **jumbo frame**

Default Setting

Disabled

Command Mode

Global Configuration

Command Usage

- This switch provides more efficient throughput for large sequential data transfers by supporting layer 2 jumbo frames on Gigabit and 10 Gigabit Ethernet ports or trunks up to 10240 bytes. Compared to standard Ethernet frames that run only up to 1.5 KB, using jumbo frames significantly reduces the per-packet overhead required to process protocol encapsulation fields.

- To use jumbo frames, both the source and destination end nodes (such as a computer or server) must support this feature. Also, when the connection is

operating at full duplex, all switches in the network between the two end nodes must be able to accept the extended frame size. And for half-duplex connections, all devices in the collision domain would need to support jumbo frames.

- The current setting for jumbo frames can be displayed with the show system command.

Example

```
Console(config)#jumbo frame
Console(config)#
```

Related Commands

show system (94)
show ipv6 mtu (665)

File Management

Managing Firmware

Firmware can be uploaded and downloaded to or from an FTP/SFTP/TFTP server. By saving runtime code to a file on an FTP/SFTP/TFTP server, that file can later be downloaded to the switch to restore operation. The switch can also be set to use new firmware without overwriting the previous version.

When downloading runtime code, the destination file name can be specified to replace the current image, or the file can be first downloaded using a different name from the current runtime code file, and then the new file set as the startup file.

Saving or Restoring Configuration Settings

Configuration settings can be uploaded and downloaded to and from an FTP/SFTP/TFTP server. The configuration file can be later downloaded to restore switch settings.

The configuration file can be downloaded under a new file name and then set as the startup file, or the current startup configuration file can be specified as the destination file to directly replace it. Note that the file “Factory_Default_Config.cfg” can be copied to the FTP/SFTP/TFTP server, but cannot be used as the destination on the switch.

Table 17: Flash/File Commands

Command	Function	Mode
General Commands		
boot system	Specifies the file or image used to start up the system	GC

Table 17: Flash/File Commands (Continued)

Command	Function	Mode
copy	Copies a code image or a switch configuration to or from flash memory or an FTP/SFTP/TFTP server	PE
delete	Deletes a file or code image	PE
dir	Displays a list of files in flash memory	PE
whichboot	Displays the files booted	PE
Automatic Code Upgrade Commands		
upgrade opcode auto	Automatically upgrades the current image when a new version is detected on the indicated server	GC
upgrade opcode path	Specifies an FTP/SFTP/TFTP server and directory in which the new opcode is stored	GC
upgrade opcode reload	Reloads the switch automatically after the opcode upgrade is completed	GC
show upgrade	Shows the opcode upgrade configuration settings.	PE
TFTP Configuration Commands		
ip tftp retry	Specifies the number of times the switch can retry transmitting a request to a TFTP server	GC
ip tftp timeout	Specifies the time the switch can wait for a response from a TFTP server before retransmitting a request or timing out for the last retry	GC
show ip tftp	Displays information about TFTP settings	PE

General Commands

boot system

This command specifies the file or image used to start up the system.

Syntax

boot system {**config** | **opcode**}: *filename*

config* - Configuration file.

opcode* - Run-time operation code.

filename - Name of configuration file or code image.

* The colon (:) is required.

Default Setting

None

Command Mode

Global Configuration

Command Usage

- A colon (:) is required after the specified file type.

- If the file contains an error, it cannot be set as the default file.

Example

```
Console(config)#boot system config: startup
Console(config)#
```

Related Commands

dir (107)
whichboot (108)

copy

This command moves (upload/download) a code image or configuration file between the switch's flash memory and an FTP/SFTP/TFTP server. When you save the system code or configuration settings to a file on an FTP/SFTP/TFTP server, that file can later be downloaded to the switch to restore system operation. The success of the file transfer depends on the accessibility of the FTP/SFTP/TFTP server and the quality of the network connection.

Syntax

copy file {**file** | **ftp** | **running-config** | **sftp** | **startup-config** | **tftp**}

copy ftp {**add-to-running-config** | **file** | **https-certificate** | **public-key** | **running-config** | **sftp** | **startup-config**}

copy running-config {**file** | **startup-config** | **tftp**}

copy startup-config {**file** | **running-config** | **tftp**}

copy tftp {**add-to-running-config** | **file** | **https-certificate** | **public-key** | **running-config** | **startup-config**}

add-to-running-config - Keyword that adds the settings listed in the specified file to the running configuration.

file - Keyword that allows you to copy to/from a file.

ftp - Keyword that allows you to copy to/from an FTP server.

https-certificate - Keyword that allows you to copy the HTTPS secure site certificate.

public-key - Keyword that allows you to copy a SSH key from a TFTP server. (See "Secure Shell" on page 233.)

running-config - Keyword that allows you to copy to/from the current running configuration.

sftp - Keyword that copies a file to or from an SFTP server.

startup-config - The configuration used for system initialization.

tftp - Keyword that allows you to copy to/from a TFTP server.

Default Setting

None

Command Mode
Privileged Exec

Command Usage
- The system prompts for data required to complete the copy command.
- The destination file name should not contain slashes (\ or /), and the maximum length for file names is 32 characters for files on the switch or 127 characters for files on the server. (Valid characters: A-Z, a-z, 0-9, ".", "-")
- The switch supports only two operation code files, but the maximum number of user-defined configuration files is 16.
- You can use "Factory_Default_Config.cfg" as the source to copy from the factory default configuration file, but you cannot use it as the destination.
- To replace the startup configuration, you must use **startup-config** as the destination.
- The Boot ROM and Loader cannot be uploaded or downloaded from the FTP/SFTP/TFTP server. You must follow the instructions in the release notes for new firmware, or contact your distributor for help.
- For information on specifying an https-certificate, see "Replacing the Default Secure-site Certificate" in the *Web Management Guide*. For information on configuring the switch to use HTTPS for a secure connection, see the ip http secure-server command.
- The reload command will not be accepted during copy operations to flash memory.
- When logging into an FTP server, the interface prompts for a user name and password configured on the remote server. Note that "anonymous" is set as the default user name.
- When logging into a remote SFTP server, the interface prompts for a user name and password configured on the remote server. If this is a first time connection, the system checks to see if the public key offered by the server matches one stored locally. If not, the server's public key will be copied to the local system.
- Secure Shell FTP (SFTP) provides a method of transferring files between two network devices over an SSH2-secured connection. SFTP functions similar to Secure Copy (SCP), using SSH for user authentication and data encryption.

  Although the underlying premises of SFTP are similar to SCP, it requires some additional steps to verify the protocol versions and perform security checks. SFTP connection setup includes verification of the DSS signature, creation of session keys, creation of client-server and server-client ciphers, SSH key exchange, and user authentication. An SFTP channel is then opened, the SFTP protocol version compatibility verified, and SFTP finally initialized.

- The reload command will not be accepted during copy operations to flash memory.

Example

The following example shows how to download new firmware from a TFTP server:

```
Console#copy tftp file
TFTP server ip address: 10.1.0.19
Choose file type:
 1. config:  2. opcode: 2
Source file name: m360.bix
Destination file name: m360.bix
\Write to FLASH Programming.
-Write to FLASH finish.
Success.
Console#
```

The following example shows how to upload the configuration settings to a file on the TFTP server:

```
Console#copy file tftp
Choose file type:
 1. config:  2. opcode: 1
Source file name: startup
TFTP server ip address: 10.1.0.99
Destination file name: startup.01
TFTP completed.
Success.

Console#
```

The following example shows how to copy the running configuration to a startup file.

```
Console#copy running-config file
destination file name: startup
Write to FLASH Programming.
\Write to FLASH finish.
Success.

Console#
```

The following example shows how to download a configuration file:

```
Console#copy tftp startup-config
TFTP server ip address: 10.1.0.99
Source configuration file name: startup.01
Startup configuration file name [startup]:
Write to FLASH Programming.

\Write to FLASH finish.
Success.
```

```
Console#
```

This example shows how to copy a secure-site certificate from an TFTP server. It then reboots the switch to activate the certificate:

```
Console#copy tftp https-certificate
TFTP server ip address: 10.1.0.19
Source certificate file name: SS-certificate
Source private file name: SS-private
Private password: ********

Success.
Console#reload
System will be restarted, continue <y/n>? y
```

This example shows how to copy a public-key used by SSH from an TFTP server. Note that public key authentication via SSH is only supported for users configured locally on the switch.

```
Console#copy tftp public-key
TFTP server IP address: 192.168.1.19
Choose public key type:
 1. RSA:  2. DSA: <1-2>: 1
Source file name: steve.pub
Username: steve
TFTP Download
Success.
Write to FLASH Programming.
Success.

Console#
```

This example shows how to copy a file to an FTP server.

```
Console#copy ftp file
FTP server IP address: 169.254.1.11
User[anonymous]: admin
Password[]: *****
Choose file type:
 1. config:  2. opcode: 2
Source file name: BLANC.BIX
Destination file name: BLANC.BIX
Console#
```

This example shows how to copy a file from an SFTP server. Note that the public key offered by the server is not found on the local system, but is saved locally after the user selects to continue the copy operation.

```
Console#copy sftp file
SFTP server IP address: 192.168.0.110
Choose file type:
```

```
1. config: 2. opcode: 1
Source file name: startup2.cfg
Destination file name: startup2.cfg
Login User Name: admin
Login User Password:
Press 'y' to allow connect to new sftp server,
and 'N' to deny connect to new sftp server: y
Success.
Console#
```

delete

This command deletes a file or image.

Syntax

delete {**file name** *filename* | **https-certificate** | **public-key** *username* [**dsa** | **rsa**]}

file - Keyword that allows you to delete a file.

name - Keyword indicating a file.

filename - Name of configuration file or code image.

https-certificate - Keyword that allows you to delete the HTTPS secure site certificate. You must reboot the switch to load the default certificate.

public-key - Keyword that allows you to delete a SSH key on the switch. (See "Secure Shell" on page 233.)

username – Name of an SSH user. (Range: 1-8 characters)

dsa – DSA public key type.

rsa – RSA public key type.

Default Setting

None

Command Mode

Privileged Exec

Command Usage

- If the file type is used for system startup, then this file cannot be deleted.
- "Factory_Default_Config.cfg" cannot be deleted.
- If the public key type is not specified, then both DSA and RSA keys will be deleted.

Example

This example shows how to delete the test2.cfg configuration file from flash memory.

```
Console#delete test2.cfg
Console#
```

Related Commands

dir (107)
delete public-key (238)

dir

This command displays a list of files in flash memory.

Syntax

dir {**config** | **opcode**}: [*filename*]}

config - Switch configuration file.

opcode - Run-time operation code image file.

filename - Name of configuration file or code image. If this file exists but contains errors, information on this file cannot be shown.

Default Setting

None

Command Mode

Privileged Exec

Command Usage

If you enter the command **dir** without any parameters, the system displays all files.

File information is shown below:

Table 18: File Directory Information

Column Heading	Description
File Name	The name of the file.
File Type	File types: Operation Code, and Config file.
Startup	Shows if this file is used when the system is started.
Modify Time	The date and time the file was last modified.
Size	The length of the file in bytes.

Example

The following example shows how to display all file information:

```
Console#dir
 Unit 1:
Level1-5261_V1.1.10a.171.bix   OpCode  Y       2016-12-09 13:18:40      8646920
Factory_Default_Config.cfg     Config  N       2017-05-24 02:57:11          476
startup1.cfg                   Config  N       2016-06-30 13:36:34         4559
-------------------------------------------------------------------------------
                                   Free space for user config files:    2611868
                                                       Total space:      32 MB
Console#
```

whichboot

This command displays which files were booted when the system powered up.

Syntax

whichboot

Default Setting

None

Command Mode

Privileged Exec

Example

This example shows the information displayed by the **whichboot** command. See the table under the **dir** command for a description of the file information displayed by this command.

```
Console#whichboot
 Unit 1:
Level1-5261_V1.1.10a.171.bix   OpCode  Y       2016-12-09 13:18:40      8646920
startup1.cfg                   Config  Y       2016-07-06 11:21:04         4537
Console#
```

Automatic Code Upgrade Commands

upgrade opcode auto

This command automatically upgrades the current operational code when a new version is detected on the server indicated by the upgrade opcode path command. Use the **no** form of this command to restore the default setting.

Syntax

[**no**] **upgrade opcode auto**

Default Setting

Disabled

Command Mode
Global Configuration

Command Usage
- This command is used to enable or disable automatic upgrade of the operational code. When the switch starts up and automatic image upgrade is enabled by this command, the switch will follow these steps when it boots up:

  1. It will search for a new version of the image at the location specified by upgrade opcode path command. The name for the new image stored on the TFTP server must be level1-5261.bix. If the switch detects a code version newer than the one currently in use, it will download the new image. If two code images are already stored in the switch, the image not set to start up the system will be overwritten by the new version.

  2. After the image has been downloaded, the switch will send a trap message to log whether or not the upgrade operation was successful.

  3. It sets the new version as the startup image.

  4. It then restarts the system to start using the new image.

- Any changes made to the default setting can be displayed with the show running-config or show startup-config commands.

Example

```
Console(config)#upgrade opcode auto
Console(config)#upgrade opcode path tftp://192.168.0.1/sm24/
Console(config)#
```

If a new image is found at the specified location, the following type of messages will be displayed during bootup.

```
⋮
Automatic Upgrade is looking for a new image
New image detected: current version 1.1.1.0; new version 1.1.1.2
Image upgrade in progress
The switch will restart after upgrade succeeds
Downloading new image
Flash programming started
Flash programming completed
The switch will now restart
⋮
```

upgrade opcode path

This command specifies an TFTP server and directory in which the new opcode is stored. Use the **no** form of this command to clear the current setting.

Syntax

upgrade opcode path *opcode-dir-url*

no upgrade opcode path

opcode-dir-url - The location of the new code.

Default Setting

None

Command Mode

Global Configuration

Command Usage

- This command is used in conjunction with the upgrade opcode auto command to facilitate automatic upgrade of new operational code stored at the location indicated by this command.
- The name for the new image stored on the TFTP server must be level1-5261.bix. However, note that file name is not to be included in this command.
- When specifying a TFTP server, the following syntax must be used, where *filedir* indicates the path to the directory containing the new image:

  `tftp://192.168.0.1[/filedir]/`
- When specifying an FTP server, the following syntax must be used, where *filedir* indicates the path to the directory containing the new image:

  `ftp://[username[:password@]]192.168.0.1[/filedir]/`

  If the user name is omitted, “anonymous” will be used for the connection. If the password is omitted a null string (“”) will be used for the connection.

Example

This shows how to specify a TFTP server where new code is stored.

```
Console(config)#upgrade opcode path tftp://192.168.0.1/sm24/
Console(config)#
```

This shows how to specify an FTP server where new code is stored.

```
Console(config)#upgrade opcode path ftp://admin:billy@192.168.0.1/sm24/
Console(config)#
```

upgrade opcode reload

This command reloads the switch automatically after the opcode upgrade is completed. Use the **no** form to disable this feature.

Syntax

[**no**] **upgrade opcode reload**

Default Setting

Disabled

Command Mode

Global Configuration

Example

This shows how to specify a TFTP server where new code is stored.

```
Console(config)#upgrade opcode reload
Console(config)#
```

show upgrade

This command shows the opcode upgrade configuration settings.

Command Mode

Privileged Exec

Example

```
Console#show upgrade
Auto Image Upgrade Global Settings:
  Status    : Disabled
  Reload Status : Disabled
  Path      :
  File Name : level1-5261.bix
Console#
```

TFTP Configuration Commands

ip tftp retry

This command specifies the number of times the switch can retry transmitting a request to a TFTP server after waiting for the configured timeout period and receiving no response. Use the **no** form to restore the default setting.

Syntax

ip tftp retry *retries*

no ip tftp retry

retries - The number of times the switch can resend a request to a TFTP server before it aborts the connection. (Range: 1-16)

Default Setting
15

Command Mode
Global Configuration

Example

```
Console(config)#ip tftp retry 10
Console(config)#
```

ip tftp timeout

This command specifies the time the switch can wait for a response from a TFTP server before retransmitting a request or timing out for the last retry. Use the **no** form to restore the default setting.

Syntax

ip tftp timeout *seconds*

no ip tftp timeout

seconds - The the time the switch can wait for a response from a TFTP server before retransmitting a request or timing out. (Range: 1-65535 seconds)

Default Setting
5 seconds

Command Mode
Global Configuration

Example

```
Console(config)#ip tftp timeout 10
Console(config)#
```

show ip tftp

This command displays information about the TFTP settings configured on this switch.

Syntax

show ip tftp

Command Mode
Privileged Exec

Example

```
Console#show ip tftp
TFTP Settings:
  Retries : 15
  Timeout : 5 seconds
Console#
```

Line

You can access the onboard configuration program by attaching a VT100 compatible device to the server's serial port. These commands are used to set communication parameters for the serial port or Telnet (i.e., a virtual terminal).

Table 19: Line Commands

Command	Function	Mode
line	Identifies a specific line for configuration and starts the line configuration mode	GC
accounting commands	Applies an accounting method to commands entered at specific CLI privilege levels	LC
accounting exec	Applies an accounting method to local console, Telnet or SSH connections	LC
authorization commands	Applies an authorization method to commands entered at specific CLI privilege levels	LC
authorization exec	Applies an authorization method to local console, Telnet or SSH connections	LC
databits*	Sets the number of data bits per character that are interpreted and generated by hardware	LC
exec-timeout	Sets the interval that the command interpreter waits until user input is detected	LC
login	Enables password checking at login	LC
parity*	Defines the generation of a parity bit	LC
password	Specifies a password on a line	LC
password-thresh	Sets the password intrusion threshold, which limits the number of failed logon attempts	LC
silent-time*	Sets the amount of time the management console is inaccessible after the number of unsuccessful logon attempts exceeds the threshold set by the password-thresh command	LC
speed*	Sets the terminal baud rate	LC
stopbits*	Sets the number of the stop bits transmitted per byte	LC
timeout login response	Sets the interval that the system waits for a login attempt	LC
disconnect	Terminates a line connection	PE

Table 19: Line Commands (Continued)

Command	Function	Mode
terminal	Configures terminal settings, including escape-character, line length, terminal type, and width	PE
show line	Displays a terminal line's parameters	NE, PE

* These commands only apply to the serial port.

line

This command identifies a specific line for configuration, and to process subsequent line configuration commands.

Syntax

line {**console** | **vty**}

console - Console terminal line.

vty - Virtual terminal for remote console access (i.e., Telnet).

Default Setting

There is no default line.

Command Mode

Global Configuration

Command Usage

Telnet is considered a virtual terminal connection and will be shown as "VTY" in screen displays such as show users. However, the serial communication parameters (e.g., databits) do not affect Telnet connections.

Example

To enter console line mode, enter the following command:

```
Console(config)#line console
Console(config-line)#
```

Related Commands

show line (123)
show users (96)

databits

This command sets the number of data bits per character that are interpreted and generated by the console port. Use the **no** form to restore the default value.

Syntax

databits {**7** | **8**}

no databits

7 - Seven data bits per character.

8 - Eight data bits per character.

Default Setting

8 data bits per character

Command Mode

Line Configuration

Command Usage

The **databits** command can be used to mask the high bit on input from devices that generate 7 data bits with parity. If parity is being generated, specify 7 data bits per character. If no parity is required, specify 8 data bits per character.

Example

To specify 7 data bits, enter this command:

```
Console(config-line-console)#databits 7
Console(config-line-console)#
```

Related Commands

parity (117)

exec-timeout

This command sets the interval that the system waits until user input is detected. Use the **no** form to restore the default.

Syntax

exec-timeout [*seconds*]

no exec-timeout

seconds - Integer that specifies the timeout interval.
(Range: 60 - 65535 seconds; 0: no timeout)

Default Setting

10 minutes

Command Mode

Line Configuration

Command Usage

- If user input is detected within the timeout interval, the session is kept open; otherwise the session is terminated.
- This command applies to both the local console and Telnet connections.
- The timeout for Telnet cannot be disabled.
- Using the command without specifying a timeout restores the default setting.

Example

To set the timeout to two minutes, enter this command:

```
Console(config-line-console)#exec-timeout 120
Console(config-line-console)#
```

login

This command enables password checking at login. Use the **no** form to disable password checking and allow connections without a password.

Syntax

login [**local**]

no login

local - Selects local password checking. Authentication is based on the user name specified with the username command.

Default Setting

login local

Command Mode

Line Configuration

Command Usage

- There are three authentication modes provided by the switch itself at login:
  - **login** selects authentication by a single global password as specified by the password line configuration command. When using this method, the management interface starts in Normal Exec (NE) mode.
  - **login local** selects authentication via the user name and password specified by the username command (i.e., default setting). When using this method, the management interface starts in Normal Exec (NE) or Privileged Exec (PE) mode, depending on the user's privilege level (0 or 15 respectively).
  - **no login** selects no authentication. When using this method, the management interface starts in Normal Exec (NE) mode.

- This command controls login authentication via the switch itself. To configure user names and passwords for remote authentication servers, you must use the RADIUS or TACACS software installed on those servers.

Example

```
Console(config-line-console)#login local
Console(config-line-console)#
```

Related Commands

username (201)
password (118)

parity

This command defines the generation of a parity bit. Use the **no** form to restore the default setting.

Syntax

parity {**none** | **even** | **odd**}

no parity

none - No parity

even - Even parity

odd - Odd parity

Default Setting

No parity

Command Mode

Line Configuration

Command Usage

Communication protocols provided by devices such as terminals and modems often require a specific parity bit setting.

Example

To specify no parity, enter this command:

```
Console(config-line-console)#parity none
Console(config-line-console)#
```

password

This command specifies the password for a line. Use the **no** form to remove the password.

Syntax

password {**0** | **7**} *password*

no password

{**0** | **7**} - 0 means plain password, 7 means encrypted password

password - Character string that specifies the line password. (Maximum length: 32 characters plain text or encrypted, case sensitive)

Default Setting

No password is specified.

Command Mode

Line Configuration

Command Usage

- When a connection is started on a line with password protection, the system prompts for the password. If you enter the correct password, the system shows a prompt. You can use the password-thresh command to set the number of times a user can enter an incorrect password before the system terminates the line connection and returns the terminal to the idle state.

- The encrypted password is required for compatibility with legacy password settings (i.e., plain text or encrypted) when reading the configuration file from an FTP/SFTP server during system bootup. There is no need for you to manually configure encrypted passwords.

Example

```
Console(config-line-console)#password 0 secret
Console(config-line-console)#
```

Related Commands

login (116)
password-thresh (118)

password-thresh

This command sets the password intrusion threshold which limits the number of failed logon attempts. Use the **no** form to remove the threshold value.

Syntax

password-thresh [*threshold*]

no password-thresh

threshold - The number of allowed password attempts. (Range: 1-120; 0: no threshold)

Default Setting
The default value is three attempts.

Command Mode
Line Configuration

Command Usage
When the logon attempt threshold is reached, the system interface becomes silent for a specified amount of time before allowing the next logon attempt. (Use the silent-time command to set this interval.) When this threshold is reached for Telnet, the Telnet logon interface shuts down.

Example
To set the password threshold to five attempts, enter this command:

```
Console(config-line-console)#password-thresh 5
Console(config-line-console)#
```

Related Commands
silent-time (119)

silent-time

This command sets the amount of time the management console is inaccessible after the number of unsuccessful logon attempts exceeds the threshold set by the password-thresh command. Use the **no** form to remove the silent time value.

Syntax

silent-time [*seconds*]

no silent-time

seconds - The number of seconds to disable console response. (Range: 0-65535; where 0 means disabled)

Default Setting
Disabled

Command Mode
Line Configuration

Example
To set the silent time to 60 seconds, enter this command:

```
Console(config-line-console)#silent-time 60
Console(config-line-console)#
```

Related Commands
password-thresh (118)

speed

This command sets the terminal line's baud rate. This command sets both the transmit (to terminal) and receive (from terminal) speeds. Use the **no** form to restore the default setting.

Syntax

speed *bps*

no speed

bps - Baud rate in bits per second.
(Options: 9600, 19200, 38400, 57600, 115200 bps)

Default Setting
115200 bps

Command Mode
Line Configuration

Command Usage
Set the speed to match the baud rate of the device connected to the serial port. Some baud rates available on devices connected to the port might not be supported. The system indicates if the speed you selected is not supported.

Example
To specify 57600 bps, enter this command:

```
Console(config-line-console)#speed 57600
Console(config-line-console)#
```

stopbits

This command sets the number of the stop bits transmitted per byte. Use the **no** form to restore the default setting.

Syntax

stopbits {**1** | **2**}

no stopbits

1 - One stop bit

2 - Two stop bits

Default Setting
1 stop bit

Command Mode
Line Configuration

Example
To specify 2 stop bits, enter this command:

```
Console(config-line-console)#stopbits 2
Console(config-line-console)#
```

timeout login response

This command sets the interval that the system waits for a user to log into the CLI. Use the **no** form to restore the default setting.

Syntax

timeout login response [*seconds*]

no timeout login response

seconds - Integer that specifies the timeout interval.
(Range: 10 - 300 seconds)

Default Setting
300 seconds

Command Mode
Line Configuration

Command Usage
- If a login attempt is not detected within the timeout interval, the connection is terminated for the session.
- This command applies to both the local console and Telnet connections.
- The timeout for Telnet cannot be disabled.
- Using the command without specifying a timeout restores the default setting.

Example
To set the timeout to two minutes, enter this command:

```
Console(config-line)#timeout login response 120
Console(config-line)#
```

disconnect

This command terminates an SSH, Telnet, or console connection.

Syntax

disconnect *session-id*

session-id – The session identifier for an SSH, Telnet or console connection. (Range: 0-8)

Command Mode

Privileged Exec

Command Usage

Specifying session identifier "0" will disconnect the console connection. Specifying any other identifiers for an active session will disconnect an SSH or Telnet connection.

Example

```
Console#disconnect 1
Console#
```

Related Commands

show ssh (242)
show users (96)

terminal

This command configures terminal settings, including escape-character, lines displayed, terminal type, width, and command history. Use the **no** form with the appropriate keyword to restore the default setting.

Syntax

terminal {**escape-character** {**ascii-number** | *character*} | **history** [**size** *size*] | **length** *length* | **terminal-type** {**ansi-bbs** | **vt-100** | **vt-102**} | **width** *width*}

escape-character - The keyboard character used to escape from current line input.

ascii-number - ASCII decimal equivalent. (Range: 0-255)

character - Any valid keyboard character.

history - The number of lines stored in the command buffer, and recalled using the arrow keys. (Range: 0-256)

length - The number of lines displayed on the screen. (Range: 24-200, where 0 means not to pause)

terminal-type - The type of terminal emulation used.

ansi-bbs - ANSI-BBS

vt-100 - VT-100

vt-102 - VT-102

width - The number of character columns displayed on the terminal. (Range: 0-80)

Default Setting

Escape Character: 27 (ASCII-number)
History: 10
Length: 24
Terminal Type: VT100
Width: 80

Command Mode

Privileged Exec

Example

This example sets the number of lines displayed by commands with lengthy output such as show running-config to 48 lines.

```
Console#terminal length 48
Console#
```

show line

This command displays the terminal line's parameters.

Syntax

show line [**console** | **vty**]

console - Console terminal line.

vty - Virtual terminal for remote console access (i.e., Telnet).

Default Setting

Shows all lines

Command Mode

Normal Exec, Privileged Exec

Example

To show all lines, enter this command:

```
Console#show line
 Terminal Configuration for this session:
  Length                        : 24
  Width                         : 80
  History Size                  : 10
  Escape Character(ASCII-number) : 27
  Terminal Type                 : VT100

 Console Configuration:
  Password Threshold : 3 times
  EXEC Timeout       : 600 seconds
  Login Timeout      : 300 seconds
```

```
  Silent Time         : Disabled
  Baud Rate           : 115200
  Data Bits           : 8
  Parity              : None
  Stop Bits           : 1

 VTY Configuration:
  Password Threshold : 3 times
  EXEC Timeout        : 600 seconds
  Login Timeout       : 300 sec.
  Silent Time         : Disabled
Console#
```

Event Logging

This section describes commands used to configure event logging on the switch.

Table 20: Event Logging Commands

Command	Function	Mode
logging command	Stores CLI command execution records in syslog RAM and flash	GC
logging facility	Sets the facility type for remote logging of syslog messages	GC
logging history	Limits syslog messages saved to switch memory based on severity	GC
logging host	Adds a syslog server host IP address that will receive logging messages	GC
logging on	Controls logging of error messages	GC
logging trap	Limits syslog messages saved to a remote server based on severity	GC
clear log	Clears messages from the logging buffer	PE
show log	Displays log messages	PE
show logging	Displays the state of logging	PE

logging command

This command stores CLI command execution records in syslog RAM and flash. Use the **no** form to disable this feature.

Syntax

[**no**] **logging command**

Default Setting

Disabled

Command Mode

Global Configuration

Command Usage

The records stored include the commands executed from the CLI, command execution time and information about the CLI user including user name, user interface (console, Telnet, SSH) and user IP address. The severity level for this record type is 6 (see the logging facility command).

Example

```
Console(config)#logging facility 19
Console(config)#
```

logging facility

This command sets the facility type for remote logging of syslog messages. Use the **no** form to return the type to the default.

Syntax

logging facility *type*

no logging facility

type - A number that indicates the facility used by the syslog server to dispatch log messages to an appropriate service. (Range: 16-23)

Default Setting

23

Command Mode

Global Configuration

Command Usage

The command specifies the facility type tag sent in syslog messages. (See RFC 3164.) This type has no effect on the kind of messages reported by the switch. However, it may be used by the syslog server to sort messages or to store messages in the corresponding database.

Example

```
Console(config)#logging facility 19
Console(config)#
```

logging history

This command limits syslog messages saved to switch memory based on severity. The **no** form returns the logging of syslog messages to the default level.

Syntax

logging history {**flash** | **ram**} *level*

no logging history {**flash** | **ram**}

flash - Event history stored in flash memory (i.e., permanent memory).

ram - Event history stored in temporary RAM (i.e., memory flushed on power reset).

level - One of the levels listed below. Messages sent include the selected level down to level 0. (Range: 0-7)

Table 21: Logging Levels

Level	Severity Name	Description
7	debugging	Debugging messages
6	informational	Informational messages only
5	notifications	Normal but significant condition, such as cold start
4	warnings	Warning conditions (e.g., return false, unexpected return)
3	errors	Error conditions (e.g., invalid input, default used)
2	critical	Critical conditions (e.g., memory allocation, or free memory error - resource exhausted)
1	alerts	Immediate action needed
0	emergencies	System unusable

Default Setting

Flash: errors (level 3 - 0)
RAM: debugging (level 7 - 0)

Command Mode

Global Configuration

Command Usage

The message level specified for flash memory must be a higher priority (i.e., numerically lower) than that specified for RAM.

Example

```
Console(config)#logging history ram 0
Console(config)#
```

logging host

This command adds a syslog server host IP address that will receive logging messages. Use the **no** form to remove a syslog server host.

Syntax

logging host *host-ip-address* [**port** *udp-port*]

no logging host *host-ip-address*

host-ip-address - The IPv4 or IPv6 address of a syslog server.

udp-port - UDP port number used by the remote server. (Range: 1-65535)

Default Setting
UPD Port: 514

Command Mode
Global Configuration

Command Usage
- Use this command more than once to build up a list of host IP addresses.
- The maximum number of host IP addresses allowed is five.

Example

```
Console(config)#logging host 10.1.0.3
Console(config)#
```

logging on

This command controls logging of error messages, sending debug or error messages to a logging process. The **no** form disables the logging process.

Syntax

[**no**] **logging on**

Default Setting
None

Command Mode
Global Configuration

Command Usage
The logging process controls error messages saved to switch memory or sent to remote syslog servers. You can use the logging history command to control the type of error messages that are stored in memory. You can use the logging trap command to control the type of error messages that are sent to specified syslog servers.

Example

```
Console(config)#logging on
Console(config)#
```

Related Commands
logging history (125)
logging trap (128)
clear log (128)

logging trap

This command enables the logging of system messages to a remote server, or limits the syslog messages saved to a remote server based on severity. Use this command without a specified level to enable remote logging. Use the **no** form to disable remote logging.

Syntax

logging trap [**level** *level*]

no logging trap [**level**]

level - One of the syslog severity levels listed in the table on page 125. Messages sent include the selected level through level 0.

Default Setting

Disabled
Level 7

Command Mode

Global Configuration

Command Usage

- Using this command with a specified level enables remote logging and sets the minimum severity level to be saved.
- Using this command without a specified level also enables remote logging, but restores the minimum severity level to the default.

Example

```
Console(config)#logging trap level 4
Console(config)#
```

clear log

This command clears messages from the log buffer.

Syntax

clear log [**flash** | **ram**]

flash - Event history stored in flash memory (i.e., permanent memory).

ram - Event history stored in temporary RAM (i.e., memory flushed on power reset).

Default Setting

Flash and RAM

Command Mode

Privileged Exec

Example

```
Console#clear log
Console#
```

Related Commands

show log (129)

show log

This command displays the log messages stored in local memory.

Syntax

show log {**flash** | **ram**}

flash - Event history stored in flash memory (i.e., permanent memory).

ram - Event history stored in temporary RAM (i.e., memory flushed on power reset).

Default Setting

None

Command Mode

Privileged Exec

Command Usage

- All log messages are retained in RAM and Flash after a warm restart (i.e., power is reset through the command interface).
- All log messages are retained in Flash and purged from RAM after a cold restart (i.e., power is turned off and then on through the power source).

Example

The following example shows the event message stored in RAM.

```
Console#show log ram
[1] 00:01:30 2001-01-01
   "VLAN 1 link-up notification."
   level: 6, module: 5, function: 1, and event no.: 1
[0] 00:01:30 2001-01-01
   "Unit 1, Port  1 link-up notification."
   level: 6, module: 5, function: 1, and event no.: 1
Console#
```

show logging

This command displays the configuration settings for logging messages to local switch memory, to an SMTP event handler, or to a remote syslog server.

Syntax

show logging {**command** | **flash** | **ram** | **sendmail** | **trap**}

command - Stores CLI command execution records in syslog RAM and flash.

flash - Displays settings for storing event messages in flash memory (i.e., permanent memory).

ram - Displays settings for storing event messages in temporary RAM (i.e., memory flushed on power reset).

sendmail - Displays settings for the SMTP event handler (page 135).

trap - Displays settings for the trap function.

Default Setting

None

Command Mode

Privileged Exec

Example

The following example shows that system logging is enabled, the message level for flash memory is “errors” (i.e., default level 3 - 0), and the message level for RAM is “debugging” (i.e., default level 7 - 0).

```
Console#show logging flash
Global Configuration:
  Syslog Logging           : Enabled
Flash Logging Configuration:
  History Logging in Flash : Level Errors (3)
Console#show logging ram
Global Configuration:
  Syslog Logging           : Enabled
Ram Logging Configuration:
  History Logging in RAM   : Level Debugging (7)
Console#
```

Table 22: show logging flash/ram - display description

Field	Description
Syslog Logging	Shows if system logging has been enabled via the logging on command.
History Logging in Flash	The message level(s) reported based on the logging history command.
History Logging in RAM	The message level(s) reported based on the logging history command.

The following example displays settings for the trap function.

```
Console#show logging trap
Global Configuration:
  Syslog Logging           : Enabled
Remote Logging Configuration:
  Status                   : Disabled
  Facility Type            : Local use 7 (23)
  Level Type               : Debugging messages (7)
Console#
```

Table 23: show logging trap - display description

Field	Description
Global Configuration	
Syslog logging	Shows if system logging has been enabled via the logging on command.
Remote Logging Configuration	
Status	Shows if remote logging has been enabled via the logging trap command.
Facility Type	The facility type for remote logging of syslog messages as specified in the logging facility command.
Level Type	The severity threshold for syslog messages sent to a remote server as specified in the logging trap command.

Related Commands

show logging sendmail (135)

SMTP Alerts

These commands configure SMTP event handling, and forwarding of alert messages to the specified SMTP servers and email recipients.

Table 24: Event Logging Commands

Command	Function	Mode
logging sendmail	Enables SMTP event handling	GC
logging sendmail destination-email	Email recipients of alert messages	GC
logging sendmail host	SMTP servers to receive alert messages	GC
logging sendmail level	Severity threshold used to trigger alert messages	GC
logging sendmail source-email	Email address used for “From” field of alert messages	GC
show logging sendmail	Displays SMTP event handler settings	NE, PE

logging sendmail

This command enables SMTP event handling. Use the **no** form to disable this function.

Syntax

[**no**] **logging sendmail**

Default Setting

Enabled

Command Mode

Global Configuration

Example

```
Console(config)#logging sendmail
Console(config)#
```

logging sendmail destination-email

This command specifies the email recipients of alert messages. Use the **no** form to remove a recipient.

Syntax

[**no**] **logging sendmail destination-email** *email-address*

email-address - The source email address used in alert messages. (Range: 1-41 characters)

Default Setting

None

Command Mode

Global Configuration

Command Usage

You can specify up to five recipients for alert messages. However, you must enter a separate command to specify each recipient.

Example

```
Console(config)#logging sendmail destination-email ted@this-company.com
Console(config)#
```

logging sendmail host

This command specifies SMTP servers that will be sent alert messages. Use the **no** form to remove an SMTP server.

Syntax

[**no**] **logging sendmail host** *ip-address*

ip-address - IPv4 address of an SMTP server that will be sent alert messages for event handling.

Default Setting

None

Command Mode

Global Configuration

Command Usage

- You can specify up to three SMTP servers for event handing. However, you must enter a separate command to specify each server.
- To send email alerts, the switch first opens a connection, sends all the email alerts waiting in the queue one by one, and finally closes the connection.
- To open a connection, the switch first selects the server that successfully sent mail during the last connection, or the first server configured by this command. If it fails to send mail, the switch selects the next server in the list and tries to send mail again. If it still fails, the system will repeat the process at a periodic interval. (A trap will be triggered if the switch cannot successfully open a connection.)

Example

```
Console(config)#logging sendmail host 192.168.1.19
Console(config)#
```

logging sendmail level

This command sets the severity threshold used to trigger alert messages. Use the **no** form to restore the default setting.

Syntax

logging sendmail level *level*

no logging sendmail level

level - One of the system message levels (page 125). Messages sent include the selected level down to level 0. (Range: 0-7; Default: 7)

Default Setting

Level 7

Command Mode
Global Configuration

Command Usage
The specified level indicates an event threshold. All events at this level or higher will be sent to the configured email recipients. (For example, using Level 7 will report all events from level 7 to level 0.)

Example
This example will send email alerts for system errors from level 3 through 0.

```
Console(config)#logging sendmail level 3
Console(config)#
```

logging sendmail source-email

This command sets the email address used for the "From" field in alert messages. Use the **no** form to restore the default value.

Syntax

logging sendmail source-email *email-address*

no logging sendmail source-email

email-address - The source email address used in alert messages. (Range: 1-41 characters)

Default Setting
None

Command Mode
Global Configuration

Command Usage
You may use an symbolic email address that identifies the switch, or the address of an administrator responsible for the switch.

Example

```
Console(config)#logging sendmail source-email bill@this-company.com
Console(config)#
```

show logging sendmail

This command displays the settings for the SMTP event handler.

Command Mode

Privileged Exec

Example

```
Console#show logging sendmail
SMTP Servers
---------------------------------------------
192.168.1.19

SMTP Minimum Severity Level: 7

SMTP Destination E-mail Addresses
---------------------------------------------
ted@this-company.com

SMTP Source E-mail Address: bill@this-company.com

SMTP Status: Enabled
Console#
```

Time

The system clock can be dynamically set by polling a set of specified time servers (NTP or SNTP). Maintaining an accurate time on the switch enables the system log to record meaningful dates and times for event entries. If the clock is not set, the switch will only record the time from the factory default set at the last bootup.

Table 25: Time Commands

Command	Function	Mode
SNTP Commands		
sntp client	Accepts time from specified time servers	GC
sntp poll	Sets the interval at which the client polls for time	GC
sntp server	Specifies one or more time servers	GC
show sntp	Shows current SNTP configuration settings	NE, PE
NTP Commands		
ntp authenticate	Enables authentication for NTP traffic	GC
ntp authentication-key	Configures authentication keys	GC
ntp client	Enables the NTP client for time updates from specified servers	GC
ntp server	Specifies NTP servers to poll for time updates	GC
show ntp	Shows current NTP configuration settings	NE, PE

Table 25: Time Commands (Continued)

Command	Function	Mode
Manual Configuration Commands		
clock summer-time (date)	Configures summer time* for the switch's internal clock	GC
clock summer-time (predefined)	Configures summer time* for the switch's internal clock	GC
clock summer-time (recurring)	Configures summer time* for the switch's internal clock	GC
clock timezone	Sets the time zone for the switch's internal clock	GC
calendar set	Sets the system date and time	PE
show calendar	Displays the current date and time setting	NE, PE

* Daylight savings time.

SNTP Commands

sntp client

This command enables SNTP client requests for time synchronization from NTP or SNTP time servers specified with the sntp server command. Use the **no** form to disable SNTP client requests.

Syntax

[**no**] **sntp client**

Default Setting

Disabled

Command Mode

Global Configuration

Command Usage

- The time acquired from time servers is used to record accurate dates and times for log events. Without SNTP, the switch only records the time starting from the factory default set at the last bootup (e.g., Dec 31 07:32:04 2014).
- This command enables client time requests to time servers specified via the sntp server command. It issues time synchronization requests based on the interval set via the sntp poll command.

Example

```
Console(config)#sntp server 10.1.0.19
Console(config)#sntp poll 60
Console(config)#sntp client
Console(config)#end
Console#show sntp
Current Time:  Dec 23 02:52:44 2015
Poll Interval: 60
Current Mode: Unicast
```

```
SNTP Status : Enabled
SNTP Server 137.92.140.80 0.0.0.0 0.0.0.0
Current Server: 137.92.140.80
Console#
```

Related Commands

sntp server (137)
sntp poll (137)
show sntp (138)

sntp poll

This command sets the interval between sending time requests when the switch is set to SNTP client mode. Use the **no** form to restore to the default.

Syntax

sntp poll *seconds*

no sntp poll

seconds - Interval between time requests. (Range: 16-16384 seconds)

Default Setting

16 seconds

Command Mode

Global Configuration

Example

```
Console(config)#sntp poll 60
Console#
```

Related Commands

sntp client (136)

sntp server

This command sets the IP address of the servers to which SNTP time requests are issued. Use the this command with no arguments to clear all time servers from the current list. Use the **no** form to clear all time servers from the current list, or to clear a specific server.

Syntax

sntp server [*ip1* [*ip2* [*ip3*]]]

no sntp server [*ip1* [*ip2* [*ip3*]]]

ip - IPv4 or IPv6 address of a time server (NTP or SNTP).
(Range: 1 - 3 addresses)

Default Setting
None

Command Mode
Global Configuration

Command Usage
This command specifies time servers from which the switch will poll for time updates when set to SNTP client mode. The client will poll the time servers in the order specified until a response is received. It issues time synchronization requests based on the interval set via the sntp poll command.

Example

```
Console(config)#sntp server 10.1.0.19
Console#
```

Related Commands
sntp client (136)
sntp poll (137)
show sntp (138)

show sntp

This command displays the current time and configuration settings for the SNTP client, and indicates whether or not the local time has been properly updated.

Command Mode
Normal Exec, Privileged Exec

Command Usage
This command displays the current time, the poll interval used for sending time synchronization requests, and the current SNTP mode (i.e., unicast).

Example

```
Console#show sntp
Current Time   : Nov  5 18:51:22 2015
Poll Interval  : 16 seconds
Current Mode   : Unicast
SNTP Status    : Enabled
SNTP Server    : 137.92.140.80
               : 137.92.140.90
               : 137.92.140.99
Current Server : 137.92.140.80
Console#
```

NTP Commands

ntp authenticate

This command enables authentication for NTP client-server communications. Use the **no** form to disable authentication.

Syntax

[**no**] **ntp authenticate**

Default Setting

Disabled

Command Mode

Global Configuration

Command Usage

You can enable NTP authentication to ensure that reliable updates are received from only authorized NTP servers. The authentication keys and their associated key number must be centrally managed and manually distributed to NTP servers and clients. The key numbers and key values must match on both the server and client.

Example

```
Console(config)#ntp authenticate
Console(config)#
```

Related Commands

ntp authentication-key (139)

ntp authentication-key

This command configures authentication keys and key numbers to use when NTP authentication is enabled. Use the **no** form of the command to clear a specific authentication key or all keys from the current list.

Syntax

ntp authentication-key *number* **md5** *key*

no ntp authentication-key [*number*]

number - The NTP authentication key ID number. (Range: 1-65535)

md5 - Specifies that authentication is provided by using the message digest algorithm 5.

key - An MD5 authentication key string. The key string can be up to 32 case-sensitive printable ASCII characters (no spaces).

Default Setting

None

Command Mode
Global Configuration

Command Usage
- The key number specifies a key value in the NTP authentication key list. Up to 255 keys can be configured on the switch. Re-enter this command for each server you want to configure.
- Note that NTP authentication key numbers and values must match on both the server and client.
- NTP authentication is optional. When enabled with the **ntp authenticate** command, you must also configure at least one key number using this command.
- Use the **no** form of this command without an argument to clear all authentication keys in the list.

Example

```
Console(config)#ntp authentication-key 45 md5 thisiskey45
Console(config)#
```

Related Commands
ntp authenticate (139)

ntp client

This command enables NTP client requests for time synchronization from NTP time servers specified with the **ntp servers** command. Use the **no** form to disable NTP client requests.

Syntax

[**no**] **ntp client**

Default Setting
Disabled

Command Mode
Global Configuration

Command Usage
- The SNTP and NTP clients cannot be enabled at the same time. First disable the SNTP client before using this command.
- The time acquired from time servers is used to record accurate dates and times for log events. Without NTP, the switch only records the time starting from the factory default set at the last bootup (e.g., Dec 10 16:04:43 2014).

- This command enables client time requests to time servers specified via the **ntp servers** command. It issues time synchronization requests based on the interval set via the **ntp poll** command.

Example

```
Console(config)#ntp client
Console(config)#
```

Related Commands

sntp client (136)
ntp server (141)

ntp server

This command sets the IP addresses of the servers to which NTP time requests are issued. Use the **no** form of the command to clear a specific time server or all servers from the current list.

Syntax

ntp server *ip-address* [**key** *key-number*]

no ntp server [*ip-address*]

ip-address - IP address of an NTP time server.

key-number - The number of an authentication key to use in communications with the server. (Range: 1-65535)

Default Setting

Version number: 3

Command Mode

Global Configuration

Command Usage

- This command specifies time servers that the switch will poll for time updates when set to NTP client mode. It issues time synchronization requests based on the interval set with the **ntp poll** command. The client will poll all the time servers configured, the responses received are filtered and compared to determine the most reliable and accurate time update for the switch.

- You can configure up to 50 NTP servers on the switch. Re-enter this command for each server you want to configure.

- NTP authentication is optional. If enabled with the **ntp authenticate** command, you must also configure at least one key number using the **ntp authentication-key** command.

- Use the **no** form of this command without an argument to clear all configured servers in the list.

Example

```
Console(config)#ntp server 192.168.3.20
Console(config)#ntp server 192.168.3.21
Console(config)#ntp server 192.168.5.23 key 19
Console(config)#
```

Related Commands

ntp client (140)
show ntp (142)

show ntp

This command displays the current time and configuration settings for the NTP client, and indicates whether or not the local time has been properly updated.

Command Mode

Normal Exec, Privileged Exec

Command Usage

This command displays the current time, the poll interval used for sending time synchronization requests, and the current NTP mode (i.e., unicast).

Example

```
Console#show ntp
Current Time             : Apr 29 13:57:32 2015
Polling                  : 1024 seconds
Current Mode             : unicast
NTP Status               : Disabled
NTP Authenticate Status  : Enabled
Last Update NTP Server   : 0.0.0.0        Port: 0
Last Update Time         : Jan  1 00:00:00 1970 UTC
NTP Server 192.168.3.20 version 3
NTP Server 192.168.3.21 version 3
NTP Server 192.168.4.22 version 3 key 19
NTP Authentication Key 19 md5 42V68751663T6K11P2J307210R885
Console#
```

Manual Configuration Commands

clock summer-time (date)

This command sets the start, end, and offset times of summer time (daylight savings time) for the switch on a one-time basis. Use the **no** form to disable summer time.

Syntax

clock summer-time *name* **date** *b-date b-month b-year b-hour b-minute e-date e-month e-year e-hour e-minute* [*offset*]

no clock summer-time

name - Name of the time zone while summer time is in effect, usually an acronym. (Range: 1-30 characters)

b-date - Day of the month when summer time will begin. (Range: 1-31)

b-month - The month when summer time will begin. (Options: **january** | **february** | **march** | **april** | **may** | **june** | **july** | **august** | **september** | **october** | **november** | **december**)

b-year- The year summer time will begin.

b-hour - The hour summer time will begin. (Range: 0-23 hours)

b-minute - The minute summer time will begin. (Range: 0-59 minutes)

e-date - Day of the month when summer time will end. (Range: 1-31)

e-month - The month when summer time will end. (Options: **january** | **february** | **march** | **april** | **may** | **june** | **july** | **august** | **september** | **october** | **november** | **december**)

e-year - The year summer time will end.

e-hour - The hour summer time will end. (Range: 0-23 hours)

e-minute - The minute summer time will end. (Range: 0-59 minutes)

offset - Summer time offset from the regular time zone, in minutes. (Range: 1-120 minutes)

Default Setting
Disabled

Command Mode
Global Configuration

Command Usage
- In some countries or regions, clocks are adjusted through the summer months so that afternoons have more daylight and mornings have less. This is known as Summer Time, or Daylight Savings Time (DST). Typically, clocks are adjusted forward one hour at the start of spring and then adjusted backward in autumn.

- This command sets the summer-time time zone relative to the currently configured time zone. To specify a time corresponding to your local time when summer time is in effect, you must indicate the number of minutes your summer-time time zone deviates from your regular time zone (that is, the offset).

Example
The following example sets the 2014 Summer Time ahead by 60 minutes on March 9th and returns to normal time on November 2nd.

```
Console(config)#clock summer-time DEST date march 9 2014 01 59 november 2
  2014 01 59 60
Console(config)#
```

Related Commands
show sntp (138)

clock summer-time (predefined)

This command configures the summer time (daylight savings time) status and settings for the switch using predefined configurations for several major regions in the world. Use the **no** form to disable summer time.

Syntax

clock summer-time *name* **predefined** [**australia** | **europe** | **new-zealand** | **usa**]

no clock summer-time

name - Name of the timezone while summer time is in effect, usually an acronym. (Range: 1-30 characters)

Default Setting
Disabled

Command Mode
Global Configuration

Command Usage
- In some countries or regions, clocks are adjusted through the summer months so that afternoons have more daylight and mornings have less. This is known as Summer Time, or Daylight Savings Time (DST). Typically, clocks are adjusted forward one hour at the start of spring and then adjusted backward in autumn.

- This command sets the summer-time time relative to the configured time zone. To specify the time corresponding to your local time when summer time is in effect, select the predefined summer-time time zone appropriate for your location, or manually configure summer time if these predefined configurations do not apply to your location (see clock summer-time (date) or clock summer-time (recurring).

Table 26: Predefined Summer-Time Parameters

Region	Start Time, Day, Week, & Month	End Time, Day, Week, & Month	Rel. Offset
Australia	00:00:00, Sunday, Week 5 of October	23:59:59, Sunday, Week 5 of March	60 min
Europe	00:00:00, Sunday, Week 5 of March	23:59:59, Sunday, Week 5 of October	60 min
New Zealand	00:00:00, Sunday, Week 1 of October	23:59:59, Sunday, Week 3 of March	60 min
USA	00:00:00, Sunday, Week 2 of March	23:59:59, Sunday, Week 1 of November	60 min

Example

The following example sets the Summer Time setting to use the predefined settings for the European region.

```
Console(config)#clock summer-time MESZ predefined europe
Console(config)#
```

Related Commands

show sntp (138)

clock summer-time (recurring)

This command allows the user to manually configure the start, end, and offset times of summer time (daylight savings time) for the switch on a recurring basis. Use the **no** form to disable summer-time.

Syntax

clock summer-time *name* **recurring** *b-week b-day b-month b-hour b-minute e-week e-day e-month e-hour e-minute* [*offset*]

no clock summer-time

name - Name of the timezone while summer time is in effect, usually an acronym. (Range: 1-30 characters)

b-week - The week of the month when summer time will begin. (Range: 1-5)

b-day - The day of the week when summer time will begin. (Options: **sunday** | **monday** | **tuesday** | **wednesday** | **thursday** | **friday** | **saturday**)

b-month - The month when summer time will begin. (Options: **january** | **february** | **march** | **april** | **may** | **june** | **july** | **august** | **september** | **october** | **november** | **december**)

b-hour - The hour when summer time will begin. (Range: 0-23 hours)

b-minute - The minute when summer time will begin. (Range: 0-59 minutes)

e-week - The week of the month when summer time will end. (Range: 1-5)

e-day - The day of the week summer time will end. (Options: **sunday** | **monday** | **tuesday** | **wednesday** | **thursday** | **friday** | **saturday**)

e-month - The month when summer time will end. (Options: **january** | **february** | **march** | **april** | **may** | **june** | **july** | **august** | **september** | **october** | **november** | **december**)

e-hour - The hour when summer time will end. (Range: 0-23 hours)

e-minute - The minute when summer time will end. (Range: 0-59 minutes)

offset - Summer-time offset from the regular time zone, in minutes. (Range: 1-120 minutes)

Default Setting

Disabled

Command Mode
Global Configuration

Command Usage
- In some countries or regions, clocks are adjusted through the summer months so that afternoons have more daylight and mornings have less. This is known as Summer Time, or Daylight Savings Time (DST). Typically, clocks are adjusted forward one hour at the start of spring and then adjusted backward in autumn.

- This command sets the summer-time time zone relative to the currently configured time zone. To display a time corresponding to your local time when summer time is in effect, you must indicate the number of minutes your summer-time time zone deviates from your regular time zone (that is, the offset).

Example
The following example sets a recurring 60 minute offset summer-time to begin on the Friday of the 1st week of March at 01:59 hours and summer time to end on the Saturday of the 2nd week of November at 01:59 hours.

```
Console(config)#clock summer-time MESZ recurring 1 friday march 01 59 3
  saturday november 1 59 60
Console(config)#
```

Related Commands
show sntp (138)

clock timezone

This command sets the time zone for the switch's internal clock.

Syntax

clock timezone *name* **hour** *hours* **minute** *minutes*
{**before-utc** | **after-utc**}

name - Name of timezone, usually an acronym. (Range: 1-30 characters)

hours - Number of hours before/after UTC. (Range: 0-12 hours before UTC, 0-13 hours after UTC)

minutes - Number of minutes before/after UTC. (Range: 0-59 minutes)

before-utc - Sets the local time zone before (east) of UTC.

after-utc - Sets the local time zone after (west) of UTC.

Default Setting
None

Command Mode
Global Configuration

Command Usage

This command sets the local time zone relative to the Coordinated Universal Time (UTC, formerly Greenwich Mean Time or GMT), based on the earth's prime meridian, zero degrees longitude. To display a time corresponding to your local time, you must indicate the number of hours and minutes your time zone is east (before) or west (after) of UTC.

Example

```
Console(config)#clock timezone Japan hours 8 minute 0 after-UTC
Console(config)#
```

Related Commands

show sntp (138)

calendar set

This command sets the system clock. It may be used if there is no time server on your network, or if you have not configured the switch to receive signals from a time server.

Syntax

calendar set *hour min sec* {*day month year* | *month day year*}

hour - Hour in 24-hour format. (Range: 0 - 23)

min - Minute. (Range: 0 - 59)

sec - Second. (Range: 0 - 59)

day - Day of month. (Range: 1 - 31)

month - **january** | **february** | **march** | **april** | **may** | **june** | **july** | **august** | **september** | **october** | **november** | **december**

year - Year (4-digit). (Range: 1970 - 2037)

Default Setting

None

Command Mode

Privileged Exec

Command Usage

Note that when SNTP is enabled, the system clock cannot be manually configured.

Example

This example shows how to set the system clock to 15:12:34, February 1st, 2015.

```
Console#calendar set 15:12:34 1 February 2015
Console#
```

show calendar

This command displays the system clock.

Default Setting

None

Command Mode

Normal Exec, Privileged Exec

Example

```
Console#show calendar
 Current Time          : May 13 14:08:18 2014
 Time Zone             : UTC, 08:00
 Summer Time           : Not configured
 Summer Time in Effect : No
Console#
```

Time Range

This section describes the commands used to sets a time range for use by other functions, such as Access Control Lists.

Table 27: Time Range Commands

Command	Function	Mode
time-range	Specifies the name of a time range, and enters time range configuration mode	GC
absolute	Sets the absolute time range for the execution of a command	TR
periodic	Sets the time range for the periodic execution of a command	TR
show time-range	Shows configured time ranges.	PE

time-range

This command specifies the name of a time range, and enters time range configuration mode. Use the **no** form to remove a previously specified time range.

Syntax

[**no**] **time-range** *name*

name - Name of the time range. (Range: 1-32 characters)

Default Setting

None

Command Mode

Global Configuration

Command Usage

- This command sets a time range for use by other functions, such as Access Control Lists.
- A maximum of eight rules can be configured for a time range.

Example

```
Console(config)#time-range r&d
Console(config-time-range)#
```

Related Commands

Access Control Lists (325)

absolute

This command sets the absolute time range for the execution of a command. Use the **no** form to remove a previously specified time.

Syntax

absolute start *hour minute day month year*
[**end** *hour minutes day month year*]

absolute end *hour minutes day month year*

no absolute

hour - Hour in 24-hour format. (Range: 0-23)

minute - Minute. (Range: 0-59)

day - Day of month. (Range: 1-31)

month - **january** | **february** | **march** | **april** | **may** | **june** | **july** | **august** | **september** | **october** | **november** | **december**

year - Year (4-digit). (Range: 2013-2037)

Default Setting

None

Command Mode

Time Range Configuration

Command Usage

- If a time range is already configured, you must use the **no** form of this command to remove the current entry prior to configuring a new time range.
- If both an absolute rule and one or more periodic rules are configured for the same time range (i.e., named entry), that entry will only take effect if the current time is within the absolute time range and one of the periodic time ranges.

Example

This example configures the time for the single occurrence of an event.

```
Console(config)#time-range r&d
Console(config-time-range)#absolute start 1 1 1 april 2009 end 2 1 1 april
  2009
Console(config-time-range)#
```

periodic

This command sets the time range for the periodic execution of a command. Use the **no** form to remove a previously specified time range.

Syntax

[**no**] **periodic** {**daily** | **friday** | **monday** | **saturday** | **sunday** | **thursday** | **tuesday** | **wednesday** | **weekdays** | **weekend**} *hour minute* to {**daily** | **friday** | **monday** | **saturday** | **sunday** | **thursday** | **tuesday** | **wednesday** | **weekdays** | **weekend** | *hour minute*}

daily - Daily

friday - Friday

monday - Monday

saturday - Saturday

sunday - Sunday

thursday - Thursday

tuesday - Tuesday

wednesday - Wednesday

weekdays - Weekdays

weekend - Weekends

hour - Hour in 24-hour format. (Range: 0-23)

minute - Minute. (Range: 0-59)

Default Setting

None

Command Mode

Time Range Configuration

Command Usage

- If a time range is already configured, you must use the **no** form of this command to remove the current entry prior to configuring a new time range.
- If both an absolute rule and one or more periodic rules are configured for the same time range (i.e., named entry), that entry will only take effect if the current time is within the absolute time range and one of the periodic time ranges.

Example

This example configures a time range for the periodic occurrence of an event.

```
Console(config)#time-range sales
Console(config-time-range)#periodic daily 1 1 to 2 1
Console(config-time-range)#
```

show time-range

This command shows configured time ranges.

Syntax

show time-range [*name*]

name - Name of the time range. (Range: 1-32 characters)

Default Setting

None

Command Mode

Privileged Exec

Example

```
Console#show time-range r&d
 Time-range r&d:
   status: inactive
   absolute start 01:01 01 April 2015
   periodic    Daily 01:01 to    Daily 02:01
   periodic    Daily 02:01 to    Daily 03:01
Console#
```

Switch Clustering

Switch Clustering is a method of grouping switches together to enable centralized management through a single unit. Switches that support clustering can be grouped together regardless of physical location or switch type, as long as they are connected to the same local network.

Table 28: Switch Cluster Commands

Command	Function	Mode
cluster	Configures clustering on the switch	GC
cluster commander	Configures the switch as a cluster Commander	GC
cluster ip-pool	Sets the cluster IP address pool for Members	GC
cluster member	Sets Candidate switches as cluster members	GC
rcommand	Provides configuration access to Member switches	PE

Table 28: Switch Cluster Commands (Continued)

Command	Function	Mode
show cluster	Displays the switch clustering status	PE
show cluster members	Displays current cluster Members	PE
show cluster candidates	Displays current cluster Candidates in the network	PE

Using Switch Clustering

- A switch cluster has a primary unit called the "Commander" which is used to manage all other "Member" switches in the cluster. The management station can use either Telnet or the web interface to communicate directly with the Commander through its IP address, and then use the Commander to manage the Member switches through the cluster's "internal" IP addresses.
- Clustered switches must be in the same Ethernet broadcast domain. In other words, clustering only functions for switches which can pass information between the Commander and potential Candidates or active Members through VLAN 4093.
- Once a switch has been configured to be a cluster Commander, it automatically discovers other cluster-enabled switches in the network. These "Candidate" switches only become cluster Members when manually selected by the administrator through the management station.
- The cluster VLAN 4093 is not configured by default. Before using clustering, take the following actions to set up this VLAN:
  1. Create VLAN 4093 (see "Editing VLAN Groups" on page 449).
  2. Add the participating ports to this VLAN (see "Configuring VLAN Interfaces" on page 451), and set them to hybrid mode, tagged members, PVID = 1, and acceptable frame type = all.

Note: Cluster Member switches can be managed either through a Telnet connection to the Commander, or through a web management connection to the Commander. When using a console connection, from the Commander CLI prompt, use the rcommand to connect to the Member switch.

cluster

This command enables clustering on the switch. Use the **no** form to disable clustering.

Syntax

[**no**] **cluster**

Default Setting
Disabled

Command Mode
Global Configuration

Command Usage
- To create a switch cluster, first be sure that clustering is enabled on the switch (the default is disabled), then set the switch as a Cluster Commander. Set a Cluster IP Pool that does not conflict with any other IP subnets in the network. Cluster IP addresses are assigned to switches when they become Members and are used for communication between Member switches and the Commander.
- Switch clusters are limited to the same Ethernet broadcast domain.
- There can be up to 100 candidates and 36 member switches in one cluster.
- A switch can only be a Member of one cluster.
- Configured switch clusters are maintained across power resets and network changes.

Example

```
Console(config)#cluster
Console(config)#
```

cluster commander

This command enables the switch as a cluster Commander. Use the **no** form to disable the switch as cluster Commander.

Syntax

[**no**] **cluster commander**

Default Setting
Disabled

Command Mode
Global Configuration

Command Usage
- Once a switch has been configured to be a cluster Commander, it automatically discovers other cluster-enabled switches in the network. These “Candidate” switches only become cluster Members when manually selected by the administrator through the management station.

- Cluster Member switches can be managed through a Telnet connection to the Commander. From the Commander CLI prompt, use the rcommand id command to connect to the Member switch.

Example

```
Console(config)#cluster commander
Console(config)#
```

cluster ip-pool

This command sets the cluster IP address pool. Use the **no** form to reset to the default address.

Syntax

cluster ip-pool *ip-address*

no cluster ip-pool

ip-address - The base IP address for IP addresses assigned to cluster Members. The IP address must start 10.x.x.x.

Default Setting

10.254.254.1

Command Mode

Global Configuration

Command Usage

- An "internal" IP address pool is used to assign IP addresses to Member switches in the cluster. Internal cluster IP addresses are in the form 10.*x.x.member-ID*. Only the base IP address of the pool needs to be set since Member IDs can only be between 1 and 36.

- Set a Cluster IP Pool that does not conflict with addresses in the network IP subnet. Cluster IP addresses are assigned to switches when they become Members and are used for communication between Member switches and the Commander.

- You cannot change the cluster IP pool when the switch is currently in Commander mode. Commander mode must first be disabled.

Example

```
Console(config)#cluster ip-pool 10.2.3.4
Console(config)#
```

cluster member

This command configures a Candidate switch as a cluster Member. Use the **no** form to remove a Member switch from the cluster.

Syntax

cluster member mac-address *mac-address* **id** *member-id*

no cluster member id *member-id*

mac-address - The MAC address of the Candidate switch.

member-id - The ID number to assign to the Member switch. (Range: 1-36)

Default Setting

No Members

Command Mode

Global Configuration

Command Usage

- The maximum number of cluster Members is 36.
- The maximum number of cluster Candidates is 100.

Example

```
Console(config)#cluster member mac-address 00-12-34-56-78-9a id 5
Console(config)#
```

rcommand

This command provides access to a cluster Member CLI for configuration.

Syntax

rcommand id *member-id*

member-id - The ID number of the Member switch. (Range: 1-36)

Command Mode

Privileged Exec

Command Usage

- This command only operates through a Telnet connection to the Member switch. Managing cluster Members using the local console CLI on the Commander is not supported.
- There is no need to enter the username and password for access to the Member switch CLI.

Example

```
Console#rcommand id 1

      CLI session with the GEL-5261 is opened.
      To end the CLI session, enter [Exit].

Vty-0#
```

show cluster

This command shows the switch clustering configuration.

Command Mode

Privileged Exec

Example

```
Console#show cluster
Role                  : commander
Interval Heartbeat    : 30
Heartbeat Loss Count  : 3 seconds
Number of Members     : 1
Number of Candidates  : 2
Console#
```

show cluster members

This command shows the current switch cluster members.

Command Mode

Privileged Exec

Example

```
Console#show cluster members
Cluster Members:
ID          : 1
Role        : Active member
IP Address  : 10.254.254.2
MAC Address : 00-E0-0C-00-00-FE
Description : GEL-5261
Console#
```

show cluster candidates

This command shows the discovered Candidate switches in the network.

Command Mode

Privileged Exec

Example

```
Console#show cluster candidates
Cluster Candidates:
Role            MAC Address       Description
--------------- ----------------- ----------------------------------------
Candidate join  00-E0-0C-00-00-FE GEL-5261
Candidate       00-12-CF-0B-47-A0 GEL-5261
Console#
```

5 SNMP Commands

SNMP commands control access to this switch from management stations using the Simple Network Management Protocol (SNMP), as well as the error types sent to trap managers.

SNMP Version 3 also provides security features that cover message integrity, authentication, and encryption; as well as controlling user access to specific areas of the MIB tree. To use SNMPv3, first set an SNMP engine ID (or accept the default), specify read and write access views for the MIB tree, configure SNMP user groups with the required security model (i.e., SNMP v1, v2c or v3) and security level (i.e., authentication and privacy), and then assign SNMP users to these groups, along with their specific authentication and privacy passwords.

Table 29: SNMP Commands

Command	Function	Mode
General SNMP Commands		
snmp-server	Enables the SNMP agent	GC
snmp-server community	Sets up the community access string to permit access to SNMP commands	GC
snmp-server contact	Sets the system contact string	GC
snmp-server location	Sets the system location string	GC
show snmp	Displays the status of SNMP communications	NE, PE
SNMP Target Host Commands		
snmp-server enable traps	Enables the device to send SNMP traps (i.e., SNMP notifications)	GC
snmp-server host	Specifies the recipient of an SNMP notification operation	GC
snmp-server enable port-traps link-up-down	Enables the device to send SNMP traps (i.e., SNMP notifications) when a link-up or link-down state change occurs	IC
snmp-server enable port-traps mac-notification	Enables the device to send SNMP traps (i.e., SNMP notifications) when a dynamic MAC address is added or removed	IC
show snmp-server enable port-traps	Shows if SNMP traps are enabled or disabled for the specified interfaces	PE
SNMPv3 Engine Commands		
snmp-server engine-id	Sets the SNMP engine ID	GC
snmp-server group	Adds an SNMP group, mapping users to views	GC
snmp-server user	Adds a user to an SNMP group	GC
snmp-server view	Adds an SNMP view	GC

Table 29: SNMP Commands (Continued)

Command	Function	Mode
show snmp engine-id	Shows the SNMP engine ID	PE
show snmp group	Shows the SNMP groups	PE
show snmp user	Shows the SNMP users	PE
show snmp view	Shows the SNMP views	PE
Notification Log Commands		
nlm	Enables the specified notification log	GC
snmp-server notify-filter	Creates a notification log and specifies the target host	GC
show nlm oper-status	Shows operation status of configured notification logs	PE
show snmp notify-filter	Displays the configured notification logs	PE
ATC Trap Commands		
snmp-server enable port-traps atc broadcast-alarm-clear	Sends a trap when broadcast traffic falls beneath the lower threshold after a storm control response has been triggered	IC (Port)
snmp-server enable port-traps atc broadcast-alarm-fire	Sends a trap when broadcast traffic exceeds the upper threshold for automatic storm control	IC (Port)
snmp-server enable port-traps atc broadcast-control-apply	Sends a trap when broadcast traffic exceeds the upper threshold for automatic storm control and the apply timer expires	IC (Port)
snmp-server enable port-traps atc broadcast-control-release	Sends a trap when broadcast traffic falls beneath the lower threshold after a storm control response has been triggered and the release timer expires	IC (Port)
snmp-server enable port-traps atc multicast-alarm-clear	Sends a trap when multicast traffic falls beneath the lower threshold after a storm control response has been triggered	IC (Port)
snmp-server enable port-traps atc multicast-alarm-fire	Sends a trap when multicast traffic exceeds the upper threshold for automatic storm control	IC (Port)
snmp-server enable port-traps atc multicast-control-apply	Sends a trap when multicast traffic exceeds the upper threshold for automatic storm control and the apply timer expires	IC (Port)
snmp-server enable port-traps atc multicast-control-release	Sends a trap when multicast traffic falls beneath the lower threshold after a storm control response has been triggered and the release timer expires	IC (Port)
Transceiver Power Threshold Trap Commands		
transceiver-threshold current	Sends a trap when the transceiver current falls outside the specified thresholds	IC (Port)
transceiver-threshold rx-power	Sends a trap when the power level of the received signal falls outside the specified thresholds	IC (Port)
transceiver-threshold temperature	Sends a trap when the transceiver temperature falls outside the specified thresholds	IC (Port)
transceiver-threshold tx-power	Sends a trap when the power level of the transmitted signal power outside the specified thresholds	IC (Port)
transceiver-threshold voltage	Sends a trap when the transceiver voltage falls outside the specified thresholds	IC (Port)

Table 29: SNMP Commands (Continued)

Command	Function	Mode
Additional Trap Commands		
memory	Sets the rising and falling threshold for the memory utilization alarm	GC
process cpu	Sets the rising and falling threshold for the CPU utilization alarm	GC
process cpu guard	Sets the CPU utilization watermark and threshold	GC
show memory	Shows memory utilization parameters	PE
show process cpu	Shows CPU utilization parameters	NE, PE
show process cpu guard	Shows the CPU utilization watermark and threshold	PE
show process cpu task	Shows CPU utilization per process	NE, PE

General SNMP Commands

snmp-server

This command enables the SNMPv3 engine and services for all management clients (i.e., versions 1, 2c, 3). Use the **no** form to disable the server.

Syntax

[**no**] **snmp-server**

Default Setting

Enabled

Command Mode

Global Configuration

Example

```
Console(config)#snmp-server
Console(config)#
```

snmp-server community

This command defines community access strings used to authorize management access by clients using SNMP v1 or v2c. Use the **no** form to remove the specified community string.

Syntax

snmp-server community *string* [**ro** | **rw**]

no snmp-server community *string*

string - Community string that acts like a password and permits access to the SNMP protocol. (Maximum length: 32 characters, case sensitive; Maximum number of strings: 5)

ro - Specifies read-only access. Authorized management stations are only able to retrieve MIB objects.

rw - Specifies read/write access. Authorized management stations are able to both retrieve and modify MIB objects.

Default Setting

- public - Read-only access. Authorized management stations are only able to retrieve MIB objects.
- private - Read/write access. Authorized management stations are able to both retrieve and modify MIB objects.

Command Mode

Global Configuration

Example

```
Console(config)#snmp-server community alpha rw
Console(config)#
```

snmp-server contact

This command sets the system contact string. Use the **no** form to remove the system contact information.

Syntax

snmp-server contact *string*

no snmp-server contact

string - String that describes the system contact information. (Maximum length: 255 characters)

Default Setting

None

Command Mode

Global Configuration

Example

```
Console(config)#snmp-server contact Paul
Console(config)#
```

Related Commands

snmp-server location (163)

snmp-server location

This command sets the system location string. Use the **no** form to remove the location string.

Syntax

snmp-server location *text*

no snmp-server location

text - String that describes the system location.
(Maximum length: 255 characters)

Default Setting

None

Command Mode

Global Configuration

Example

```
Console(config)#snmp-server location WC-19
Console(config)#
```

Related Commands

snmp-server contact (162)

show snmp

This command can be used to check the status of SNMP communications.

Default Setting

None

Command Mode

Normal Exec, Privileged Exec

Command Usage

This command provides information on the community access strings, counters for SNMP input and output protocol data units, and whether or not SNMP logging has been enabled with the **snmp-server enable traps** command.

Example

```
Console#show snmp

SNMP Agent : Enabled

SNMP Traps :
 Authentication : Enabled
 MAC-notification : Disabled
 MAC-notification interval : 1 second(s)

SNMP Communities :
   1. public, and the access level is read-only
```

```
   2. private, and the access level is read/write

0 SNMP packets input
    0 Bad SNMP version errors
    0 Unknown community name
    0 Illegal operation for community name supplied
    0 Encoding errors
    0 Number of requested variables
    0 Number of altered variables
    0 Get-request PDUs
    0 Get-next PDUs
    0 Set-request PDUs
0 SNMP packets output
    0 Too big errors
    0 No such name errors
    0 Bad values errors
    0 General errors
    0 Response PDUs
    0 Trap PDUs

SNMP Logging: Disabled
Console#
```

SNMP Target Host Commands

snmp-server enable traps

This command enables this device to send Simple Network Management Protocol traps or informs (i.e., SNMP notifications). Use the **no** form to disable SNMP notifications.

Syntax

[**no**] **snmp-server enable traps** [**authentication** | **mac-notification** [**interval** *seconds*]]

authentication - Keyword to issue authentication failure notifications.

mac-notification - Keyword to issue trap when a dynamic MAC address is added or removed.

interval - Specifies the interval between issuing two consecutive traps. (Range: 1-3600 seconds; Default: 1 second)

Default Setting

Issue authentication traps
Other traps are disabled

Command Mode

Global Configuration

Command Usage

- If you do not enter an **snmp-server enable traps** command, no notifications controlled by this command are sent. In order to configure this device to send SNMP notifications, you must enter at least one **snmp-server enable traps** command. If you enter the command with no keywords, both authentication

notifications are enabled. If you enter the command with a keyword, only the notification type related to that keyword is enabled.

- The **snmp-server enable traps** command is used in conjunction with the snmp-server host command. Use the snmp-server host command to specify which host or hosts receive SNMP notifications. In order to send notifications, you must configure at least one snmp-server host command.
- The authentication traps are legacy notifications, and therefore when used for SNMP Version 3 hosts, they must be enabled in conjunction with the corresponding entries in the Notify View assigned by the snmp-server group command.

Example

```
Console(config)#snmp-server enable traps authentication
Console(config)#
```

Related Commands

snmp-server host (165)

snmp-server host

This command specifies the recipient of a Simple Network Management Protocol notification operation. Use the **no** form to remove the specified host.

Syntax

snmp-server host *host-addr* [**inform** [**retry** *retries* | **timeout** *seconds*]] *community-string* [**version** {**1** | **2c** | **3** {**auth** | **noauth** | **priv**} [**udp-port** *port*]}

no snmp-server host *host-addr*

host-addr - IPv4 or IPv6 address of the host (the targeted recipient). (Maximum host addresses: 5 trap destination IP address entries)

inform - Notifications are sent as inform messages. Note that this option is only available for version 2c and 3 hosts. (Default: traps are used)

retries - The maximum number of times to resend an inform message if the recipient does not acknowledge receipt. (Range: 0-255; Default: 3)

seconds - The number of seconds to wait for an acknowledgment before resending an inform message. (Range: 0-2147483647 centiseconds; Default: 1500 centiseconds)

community-string - Password-like community string sent with the notification operation to SNMP V1 and V2c hosts. Although you can set this string using the **snmp-server host** command by itself, we recommend defining it with the snmp-server community command prior to using the **snmp-server host** command. (Maximum length: 32 characters)

version - Specifies whether to send notifications as SNMP Version 1, 2c or 3 traps. (Range: 1, 2c, 3; Default: 1)

auth | **noauth** | **priv** - This group uses SNMPv3 with authentication, no authentication, or with authentication and privacy. See "Simple Network Management Protocol" in the *Web Management Guide* for further information about these authentication and encryption options.

port - Host UDP port to use. (Range: 1-65535; Default: 162)

Default Setting

Host Address: None
Notification Type: Traps
SNMP Version: 1
UDP Port: 162

Command Mode

Global Configuration

Command Usage

- If you do not enter an **snmp-server host** command, no notifications are sent. In order to configure the switch to send SNMP notifications, you must enter at least one **snmp-server host** command. In order to enable multiple hosts, you must issue a separate **snmp-server host** command for each host.

- The **snmp-server host** command is used in conjunction with the snmp-server enable traps command. Use the snmp-server enable traps command to enable the sending of traps or informs and to specify which SNMP notifications are sent globally. For a host to receive notifications, at least one snmp-server enable traps command and the **snmp-server host** command for that host must be enabled.

- Some notification types cannot be controlled with the snmp-server enable traps command. For example, some notification types are always enabled.

- Notifications are issued by the switch as trap messages by default. The recipient of a trap message does not send a response to the switch. Traps are therefore not as reliable as inform messages, which include a request for acknowledgement of receipt. Informs can be used to ensure that critical information is received by the host. However, note that informs consume more system resources because they must be kept in memory until a response is received. Informs also add to network traffic. You should consider these effects when deciding whether to issue notifications as traps or informs.

  To send an inform to a SNMPv2c host, complete these steps:

  1. Enable the SNMP agent (page 161).
  2. Create a view with the required notification messages (page 173).
  3. Create a group that includes the required notify view (page 170).

4. Allow the switch to send SNMP traps; i.e., notifications (page 164).
5. Specify the target host that will receive inform messages with the **snmp-server host** command as described in this section.

To send an inform to a SNMPv3 host, complete these steps:

1. Enable the SNMP agent (page 161).
2. Create a remote SNMPv3 user to use in the message exchange process (page 171).
3. Create a view with the required notification messages (page 173).
4. Create a group that includes the required notify view (page 170).
5. Allow the switch to send SNMP traps; i.e., notifications (page 164).
6. Specify the target host that will receive inform messages with the **snmp-server host** command as described in this section.

- The switch can send SNMP Version 1, 2c or 3 notifications to a host IP address, depending on the SNMP version that the management station supports. If the **snmp-server host** command does not specify the SNMP version, the default is to send SNMP version 1 notifications.

- If you specify an SNMP Version 3 host, then the community string is interpreted as an SNMP user name. The user name must first be defined with the snmp-server user command. Otherwise, an SNMPv3 group will be automatically created by the **snmp-server host** command using the name of the specified community string, and default settings for the read, write, and notify view.

Example

```
Console(config)#snmp-server host 10.1.19.23 batman
Console(config)#
```

Related Commands

snmp-server enable traps (164)

snmp-server enable port-traps link-up-down

This command enables the device to send SNMP traps (i.e., SNMP notifications) when a link-up or link-down state change occurs. Use the **no** form to restore the default setting.

Syntax

[**no**] **snmp-server enable port-traps link-up-down**

link-up-down - Keyword to issue trap when a link-up or link-down state change occurs.

Default Setting

Disabled

Command Mode
Interface Configuration (Ethernet, Port Channel)

Example

```
Console(config)#interface ethernet 1/1
Console(config-if)#snmp-server enable port-traps mac-notification
Console(config)#
```

snmp-server enable port-traps mac-notification

This command enables the device to send SNMP traps (i.e., SNMP notifications) when a dynamic MAC address is added or removed. Use the no form to restore the default setting.

Syntax

[**no**] **snmp-server enable port-traps mac-notification**

mac-notification - Keyword to issue trap when a dynamic MAC address is added or removed.

Default Setting
Disabled

Command Mode
Interface Configuration (Ethernet, Port Channel)

Command Usage
This command can enable MAC authentication traps on the current interface only if they are also enabled at the global level with the snmp-server enable traps mac-authentication command.

Example

```
Console(config)#interface ethernet 1/1
Console(config-if)#snmp-server enable port-traps mac-notification
Console(config)#
```

show snmp-server enable port-traps

This command shows if SNMP traps are enabled or disabled for the specified interfaces.

Syntax

show snmp-server enable port-traps interface [*interface*]

interface

ethernet *unit/port*

unit - Unit identifier. (Range: 1)

port - Port number. (Range: 1-52)

port-channel *channel-id* (Range: 1-8)

Command Mode
Privileged Exec

Example

```
Console#show snmp-server enable port-traps interface
Interface MAC Notification Trap
--------- --------------------
Eth 1/1                      No
Eth 1/2                      No
Eth 1/3                      No
⋮
```

SNMPv3 Commands

snmp-server engine-id

This command configures an identification string for the SNMPv3 engine. Use the **no** form to restore the default.

Syntax

snmp-server engine-id {**local** | **remote** {*ip-address*}} *engineid-string*

no snmp-server engine-id {**local** | **remote** {*ip-address*}}

local - Specifies the SNMP engine on this switch.

remote - Specifies an SNMP engine on a remote device.

ip-address - IPv4 or IPv6 address of the remote device.

engineid-string - String identifying the engine ID. (Range: 9-64 hexadecimal characters)

Default Setting
A unique engine ID is automatically generated by the switch based on its MAC address.

Command Mode
Global Configuration

Command Usage
- An SNMP engine is an independent SNMP agent that resides either on this switch or on a remote device. This engine protects against message replay, delay, and redirection. The engine ID is also used in combination with user passwords to generate the security keys for authenticating and encrypting SNMPv3 packets.

- A remote engine ID is required when using SNMPv3 informs. (See the snmp-server host command.) The remote engine ID is used to compute the security digest for authentication and encryption of packets passed between the switch and a user on the remote host. SNMP passwords are localized using the engine

ID of the authoritative agent. For informs, the authoritative SNMP agent is the remote agent. You therefore need to configure the remote agent's SNMP engine ID before you can send proxy requests or informs to it.

- Trailing zeroes need not be entered to uniquely specify a engine ID. In other words, the value "0123456789" is equivalent to "0123456789" followed by 16 zeroes for a local engine ID.
- A local engine ID is automatically generated that is unique to the switch. This is referred to as the default engine ID. If the local engine ID is deleted or changed, all SNMP users will be cleared. You will need to reconfigure all existing users (page 171).

Example

```
Console(config)#snmp-server engine-id local 1234567890
Console(config)#snmp-server engine-id remote 192.168.1.19 9876543210
Console(config)#
```

Related Commands

snmp-server host (165)

snmp-server group

This command adds an SNMP group, mapping SNMP users to SNMP views. Use the **no** form to remove an SNMP group.

Syntax

snmp-server group *groupname*
{**v1** | **v2c** | **v3** {**auth** | **noauth** | **priv**}}
[**read** *readview*] [**write** *writeview*] [**notify** *notifyview*]

no snmp-server group *groupname*

groupname - Name of an SNMP group. (Range: 1-32 characters)

v1 | **v2c** | **v3** - Use SNMP version 1, 2c or 3.

auth | **noauth** | **priv** - This group uses SNMPv3 with authentication, no authentication, or with authentication and privacy. See "Simple Network Management Protocol" in the *Web Management Guide* for further information about these authentication and encryption options.

readview - Defines the view for read access. (1-32 characters)

writeview - Defines the view for write access. (1-32 characters)

notifyview - Defines the view for notifications. (1-32 characters)

Default Setting

Default groups: public[1] (read only), private[2] (read/write)
readview - Every object belonging to the Internet OID space (1).
writeview - Nothing is defined.
notifyview - Nothing is defined.

Command Mode
Global Configuration

Command Usage
- A group sets the access policy for the assigned users.
- When authentication is selected, the MD5 or SHA algorithm is used as specified in the snmp-server user command.
- When privacy is selected, the DES 56-bit algorithm is used for data encryption.
- For additional information on the notification messages supported by this switch, see table for "Supported Notification Messages" in the *Web Management Guide*. Also, note that the authentication, link-up and link-down messages are legacy traps and must therefore be enabled in conjunction with the snmp-server enable traps command.

Example

```
Console(config)#snmp-server group r&d v3 auth write daily
Console(config)#
```

snmp-server user

This command adds a user to an SNMP group, restricting the user to a specific SNMP Read, Write, or Notify View. Use the **no** form to remove a user from an SNMP group.

Syntax

snmp-server user *username groupname* {**v1** | **v2c** | **v3** [**encrypted**] [**auth** {**md5** | **sha**} *auth-password* [**priv** {**3des** | **aes128** | **aes192** | **aes256** | **des56**} *priv-password*]]

snmp-server user *username groupname* **remote** *ip-address* {**v3** [**encrypted**] [**auth** {**md5** | **sha**} *auth-password* [**priv** {**3des** | **aes128** | **aes192** | **aes256** | **des56**} *priv-password*]]

no snmp-server user *username* {**v1** | **v2c** | **v3** | **remote** *ip-address* **v3**}

username - Name of user connecting to the SNMP agent. (Range: 1-32 characters)

groupname - Name of an SNMP group to which the user is assigned. (Range: 1-32 characters)

remote - Specifies an SNMP engine on a remote device.

ip-address - IPv4 address of the remote device.

v1 | **v2c** | **v3** - Use SNMP version 1, 2c or 3.

encrypted - Accepts the password as encrypted input.

1. No view is defined.
2. Maps to the defaultview.

auth - Uses SNMPv3 with authentication.

md5 | **sha** - Uses MD5 or SHA authentication.

auth-password - Authentication password. Enter as plain text if the **encrypted** option is not used. Otherwise, enter an encrypted password. (Range: 8-32 characters for unencrypted password.)

If the **encrypted** option is selected, enter an encrypted password. (Range: 32 characters for MD5 encrypted password, 40 characters for SHA encrypted password)

3des - Uses SNMPv3 with privacy with 3DES (168-bit) encryption.

aes128 - Uses SNMPv3 with privacy with AES128 encryption.

aes192 - Uses SNMPv3 with privacy with AES192 encryption.

aes256 - Uses SNMPv3 with privacy with AES256 encryption.

des56 - Uses SNMPv3 with privacy with DES56 encryption.

priv-password - Privacy password. Enter as plain text if the **encrypted** option is not used. Otherwise, enter an encrypted password. (Range: 8-32 characters)

Default Setting
None

Command Mode
Global Configuration

Command Usage
- Local users (i.e., the command does not specify a remote engine identifier) must be configured to authorize management access for SNMPv3 clients, or to identify the source of SNMPv3 trap messages sent from the local switch.
- Remote users (i.e., the command specifies a remote engine identifier) must be configured to identify the source of SNMPv3 inform messages sent from the local switch.
- The SNMP engine ID is used to compute the authentication/privacy digests from the password. You should therefore configure the engine ID with the snmp-server engine-id command before using this configuration command.
- Before you configure a remote user, use the snmp-server engine-id command to specify the engine ID for the remote device where the user resides. Then use the **snmp-server user** command to specify the user and the IP address for the remote device where the user resides. The remote agent's SNMP engine ID is used to compute authentication/privacy digests from the user's password. If the remote engine ID is not first configured, the **snmp-server user** command specifying a remote user will fail.
- SNMP passwords are localized using the engine ID of the authoritative agent. For informs, the authoritative SNMP agent is the remote agent. You therefore

need to configure the remote agent's SNMP engine ID before you can send proxy requests or informs to it.

Example

```
Console(config)#snmp-server user steve r&d v3 auth md5 greenpeace priv des56
  einstien
Console(config)#snmp-server engine-id remote 192.168.1.19 9876543210
Console(config)#snmp-server user mark r&d remote 192.168.1.19 v3 auth md5
  greenpeace priv des56 einstien
Console(config)#
```

snmp-server view

This command adds an SNMP view which controls user access to the MIB. Use the **no** form to remove an SNMP view.

Syntax

snmp-server view *view-name oid-tree* {**included** | **excluded**}

no snmp-server view *view-name*

view-name - Name of an SNMP view. (Range: 1-32 characters)

oid-tree - Object identifier of a branch within the MIB tree. Wild cards can be used to mask a specific portion of the OID string. (Refer to the examples.)

included - Defines an included view.

excluded - Defines an excluded view.

Default Setting

defaultview (includes access to the entire MIB tree)

Command Mode

Global Configuration

Command Usage

- Views are used in the snmp-server group command to restrict user access to specified portions of the MIB tree.
- The predefined view "defaultview" includes access to the entire MIB tree.

Examples

This view includes MIB-2.

```
Console(config)#snmp-server view mib-2 1.3.6.1.2.1 included
Console(config)#
```

This view includes the MIB-2 interfaces table, ifDescr. The wild card is used to select all the index values in the following table.

```
Console(config)#snmp-server view ifEntry.2 1.3.6.1.2.1.2.2.1.*.2 included
Console(config)#
```

This view includes the MIB-2 interfaces table, and the mask selects all index entries.

```
Console(config)#snmp-server view ifEntry.a 1.3.6.1.2.1.2.2.1.1.* included
Console(config)#
```

show snmp engine-id

This command shows the SNMP engine ID.

Command Mode

Privileged Exec

Example

This example shows the default engine ID.

```
Console#show snmp engine-id
Local SNMP EngineID: 8000002a8000000000e8666672
Local SNMP EngineBoots: 1

Remote SNMP Engine ID                                        IP address
80000000030004e2b316c54321                                   192.168.1.19
Console#
```

Table 30: show snmp engine-id - display description

Field	Description
Local SNMP engineID	String identifying the engine ID.
Local SNMP engineBoots	The number of times that the engine has (re-)initialized since the snmp EngineID was last configured.
Remote SNMP engineID	String identifying an engine ID on a remote device.
IP address	IP address of the device containing the corresponding remote SNMP engine.

show snmp group

Four default groups are provided – SNMPv1 read-only access and read/write access, and SNMPv2c read-only access and read/write access.

Command Mode

Privileged Exec

Example

```
Console#show snmp group
Group Name     : r&d
Security Model : v3
Security Level : Authentication and privacy
Read View      : No readview specified
Write View     : No writeview specified
Notify View    : No notifyview specified
Storage Type   : Nonvolatile
Row Status     : Active

Group Name     : public
Security Model : v1
Read View      : defaultview
Write View     : No writeview specified
Notify View    : No notifyview specified
Storage Type   : Volatile
Row Status     : Active

Group Name     : public
Security Model : v2c
Read View      : defaultview
Write View     : No writeview specified
Notify View    : No notifyview specified
Storage Type   : Volatile
Row Status     : Active

Group Name     : private
Security Model : v1
Read View      : defaultview
Write View     : defaultview
Notify View    : No notifyview specified
Storage Type   : Volatile
Row Status     : Active

Group Name     : private
Security Model : v2c
Read View      : defaultview
Write View     : defaultview
Notify View    : No notifyview specified
Storage Type   : Volatile
Row Status     : Active
Console#
```

Table 31: show snmp group - display description

Field	Description
Group Name	Name of an SNMP group.
Security Model	The SNMP version.
Security Level	This associated security level can use SNMPv3 with authentication, no authentication, or with authentication and privacy.

Table 31: show snmp group - display description (Continued)

Field	Description
Read View	The associated read view.
Write View	The associated write view.
Notify View	The associated notify view.
Storage Type	The storage type for this entry.
Row Status	The row status of this entry.

show snmp user

This command shows information on SNMP users.

Command Mode

Privileged Exec

Example

```
Console#show snmp user
Engine ID                : 800001030300e00c0000fd0000
User Name                : steve
Group Name               : rd
Security Model           : v1
Security Level           : Authentication and privacy
Authentication Protocol  : None
Privacy Protocol         : None
Storage Type             : Nonvolatile
Row Status               : Active

SNMP remote user
Engine ID                : 0000937564846450000
User Name                : mark
Group Name               : public
Security Model           : v3
Security Level           : Anthentication and privacy
Authentication Protocol  : MD5
Privacy Protocol         : DES56
Storage Type             : Nonvolatile
Row Status               : Active
Console#
```

Table 32: show snmp user - display description

Field	Description
Engine ID	String identifying the engine ID.
User Name	Name of user connecting to the SNMP agent.
Group Name	Name of an SNMP group.
Security Model	The user security model: SNMP v1, v2c or v3.
Security Level	Indicates if authentication or encryption are used.
Authentication Protocol	The authentication protocol used with SNMPv3.
Privacy Protocol	The privacy protocol used with SNMPv3.

Table 32: show snmp user - display description (Continued)

Field	Description
Storage Type	The storage type for this entry.
Row Status	The row status of this entry.
SNMP remote user	A user associated with an SNMP engine on a remote device.

show snmp view

This command shows information on the SNMP views.

Command Mode

Privileged Exec

Example

```
Console#show snmp view
View Name: mib-2
Subtree OID: 1.2.2.3.6.2.1
View Type: included
Storage Type: permanent
Row Status: active

View Name    : defaultview
Subtree OID  : 1
View Type    : included
Storage Type : volatile
Row Status   : active
Console#
```

Table 33: show snmp view - display description

Field	Description
View Name	Name of an SNMP view.
Subtree OID	A branch in the MIB tree.
View Type	Indicates if the view is included or excluded.
Storage Type	The storage type for this entry.
Row Status	The row status of this entry.

Notification Log Commands

nlm

This command enables or disables the specified notification log.

Syntax

[**no**] **nlm** *filter-name*

filter-name - Notification log name. (Range: 1-32 characters)

Default Setting
None

Command Mode
Global Configuration

Command Usage
- Notification logging is enabled by default, but will not start recording information until a logging profile specified by the snmp-server notify-filter command is enabled by the **nlm** command.

- Disabling logging with this command does not delete the entries stored in the notification log.

Example
This example enables the notification log A1.

```
Console(config)#nlm A1
Console(config)#
```

snmp-server notify-filter

This command creates an SNMP notification log. Use the **no** form to remove this log.

Syntax

[**no**] **snmp-server notify-filter** *profile-name* **remote** *ip-address*

profile-name - Notification log profile name. (Range: 1-32 characters)

ip-address - IPv4 or IPv6 address of a remote device. The specified target host must already have been configured using the snmp-server host command.

Note: The notification log is stored locally. It is not sent to a remote device. This remote host parameter is only required to complete mandatory fields in the SNMP Notification MIB.

Default Setting
None

Command Mode
Global Configuration

Command Usage
- Systems that support SNMP often need a mechanism for recording Notification information as a hedge against lost notifications, whether there are Traps or Informs that may exceed retransmission limits. The Notification Log MIB (NLM,

RFC 3014) provides an infrastructure in which information from other MIBs may be logged.

- Given the service provided by the NLM, individual MIBs can now bear less responsibility to record transient information associated with an event against the possibility that the Notification message is lost, and applications can poll the log to verify that they have not missed any important Notifications.

- If notification logging is not configured and enabled, when the switch reboots, some SNMP traps (such as warm start) cannot be logged.

- To avoid this problem, notification logging should be configured and enabled using the **snmp-server notify-filter** command and nlm command, and these commands stored in the startup configuration file. Then when the switch reboots, SNMP traps (such as warm start) can now be logged.

- When this command is executed, a notification log is created (with the default parameters defined in RFC 3014). Notification logging is enabled by default (see the nlm command), but will not start recording information until a logging profile specified with this command is enabled with the nlm command.

- Based on the default settings used in RFC 3014, a notification log can contain up to 256 entries, and the entry aging time is 1440 minutes. Information recorded in a notification log, and the entry aging time can only be configured using SNMP from a network management station.

- When a trap host is created with the snmp-server host command, a default notify filter will be created as shown in the example under the show snmp notify-filter command.

Example

This example first creates an entry for a remote host, and then instructs the switch to record this device as the remote host for the specified notification log.

```
Console(config)#snmp-server host 10.1.19.23 batman
Console(config)#snmp-server notify-filter A1 remote 10.1.19.23
Console#
```

show nlm oper-status

This command shows the operational status of configured notification logs.

Command Mode

Privileged Exec

Example

```
Console#show nlm oper-status
Filter Name: A1
Oper-Status: Operational
Console#
```

show snmp notify-filter

This command displays the configured notification logs.

Command Mode

Privileged Exec

Example

This example displays the configured notification logs and associated target hosts.

```
Console#show snmp notify-filter
Filter profile name            IP address
----------------------------  ----------------
A1                             10.1.19.23
Console#
```

Additional Trap Commands

memory

This command sets an SNMP trap based on configured thresholds for memory utilization. Use the **no** form to restore the default setting.

Syntax

memory {**rising** *rising-threshold* | **falling** *falling-threshold*}

no memory {**rising** | **falling**}

rising-threshold - Rising threshold for memory utilization alarm expressed in percentage. (Range: 1-100)

falling-threshold - Falling threshold for memory utilization alarm expressed in percentage. (Range: 1-100)

Default Setting

Rising Threshold: 90%
Falling Threshold: 70%

Command Mode

Global Configuration

Command Usage

Once the rising alarm threshold is exceeded, utilization must drop beneath the falling threshold before the alarm is terminated, and then exceed the rising threshold again before another alarm is triggered.

Example

```
Console(config)#memory rising 80
Console(config)#memory falling 60
Console#
```

Related Commands

show memory (89)

process cpu

This command sets an SNMP trap based on configured thresholds for CPU utilization. Use the no form to restore the default setting.

Syntax

process cpu {**rising** *rising-threshold* | **falling** *falling-threshold*}

no process cpu {**rising** | **falling**}

rising-threshold - Rising threshold for CPU utilization alarm expressed in percentage. (Range: 1-100)

falling-threshold - Falling threshold for CPU utilization alarm expressed in percentage. (Range: 1-100)

Default Setting

Rising Threshold: 90%
Falling Threshold: 70%

Command Mode

Global Configuration

Command Usage

Once the rising alarm threshold is exceeded, utilization must drop beneath the falling threshold before the alarm is terminated, and then exceed the rising threshold again before another alarm is triggered.

Example

```
Console(config)#process cpu rising 80
Console(config)#process cpu falling 60
Console#
```

Related Commands

show process cpu (89)

process cpu guard

This command sets the CPU utilization high and low watermarks in percentage of CPU time utilized and the CPU high and low thresholds in the number of packets being processed per second. Use the **no** form of this command without any parameters to restore all of the default settings, or with a specific parameter to restore the default setting for that item.

Syntax

process cpu guard [**high-watermark** *high-watermark* | **low-watermark** *low-watermark* | **max-threshold** *max-threshold* | **min-threshold** *min-threshold* | **trap**]

high-watermark - If the percentage of CPU usage time is higher than the high-watermark, the switch stops packet flow to the CPU (allowing it to catch up with packets already in the buffer) until usage time falls below the low watermark. (Range: 40-100%)

low-watermark - If packet flow has been stopped after exceeding the high watermark, normal flow will be restored after usage falls beneath the low watermark. (Range: 40-100%)

max-threshold - If the number of packets being processed per second by the CPU is higher than the maximum threshold, the switch stops packet flow to the CPU (allowing it to catch up with packets already in the buffer) until the number of packets being processed falls below the minimum threshold. (Range: 50-500 pps)

min-threshold - If packet flow has been stopped after exceeding the maximum threshold, normal flow will be restored after usage falls beneath the minimum threshold. (Range: 50-500 pps)

trap - If traps are enabled, the switch will send an alarm message if CPU utilization exceeds the high watermark in percentage of CPU usage time or exceeds the maximum threshold in the number of packets being processed by the CPU.

Default Setting

Guard Status: Disabled
High Watermark: 90%
Low Watermark: 70%
Maximum Threshold: 500 packets per second
Minimum Threshold: 50 packets per second
Trap Status: Disabled

Command Mode

Global Configuration

Command Usage

- Once the high watermark is exceeded, utilization must drop beneath the low watermark before the alarm is terminated, and then exceed the high watermark again before another alarm is triggered.

- Once the maximum threshold is exceeded, utilization must drop beneath the minimum threshold before the alarm is terminated, and then exceed the maximum threshold again before another alarm is triggered.

Example

```
Console(config)#process cpu guard high-watermark 80
Console(config)#process cpu guard low-watermark 60
Console(config)#
```

Related Commands

show process cpu guard (90)

6 Remote Monitoring Commands

Remote Monitoring allows a remote device to collect information or respond to specified events on an independent basis. This switch is an RMON-capable device which can independently perform a wide range of tasks, significantly reducing network management traffic. It can continuously run diagnostics and log information on network performance. If an event is triggered, it can automatically notify the network administrator of a failure and provide historical information about the event. If it cannot connect to the management agent, it will continue to perform any specified tasks and pass data back to the management station the next time it is contacted.

This switch supports mini-RMON, which consists of the Statistics, History, Event and Alarm groups. When RMON is enabled, the system gradually builds up information about its physical interfaces, storing this information in the relevant RMON database group. A management agent then periodically communicates with the switch using the SNMP protocol. However, if the switch encounters a critical event, it can automatically send a trap message to the management agent which can then respond to the event if so configured.

Table 34: RMON Commands

Command	Function	Mode
rmon alarm	Sets threshold bounds for a monitored variable	GC
rmon event	Creates a response event for an alarm	GC
rmon collection history	Periodically samples statistics	IC
rmon collection rmon1	Enables statistics collection	IC
show rmon alarms	Shows the settings for all configured alarms	PE
show rmon events	Shows the settings for all configured events	PE
show rmon history	Shows the sampling parameters for each entry	PE
show rmon statistics	Shows the collected statistics	PE

rmon alarm

This command sets threshold bounds for a monitored variable. Use the **no** form to remove an alarm.

Syntax

rmon alarm *index variable interval* {**absolute** | **delta**}
rising-threshold *threshold* [*event-index*] **falling-threshold** *threshold* [*event-index*] [**owner** *name*]

no rmon alarm *index*

index – Index to this entry. (Range: 1-65535)

variable – The object identifier of the MIB variable to be sampled. Only variables of the type etherStatsEntry.n.n may be sampled. Note that etherStatsEntry.n uniquely defines the MIB variable, and etherStatsEntry.n.n defines the MIB variable, plus the etherStatsIndex. For example, 1.3.6.1.2.1.16.1.1.1.6.1 denotes etherStatsBroadcastPkts, plus the etherStatsIndex of 1.

interval – The polling interval. (Range: 1-31622400 seconds)

absolute – The variable is compared directly to the thresholds at the end of the sampling period.

delta – The last sample is subtracted from the current value and the difference is then compared to the thresholds.

threshold – An alarm threshold for the sampled variable. (Range: 0-2147483647)

event-index – The index of the event to use if an alarm is triggered. If there is no corresponding entry in the event control table, then no event will be generated. (Range: 1-65535)

name – Name of the person who created this entry. (Range: 1-127 characters)

Default Setting

1.3.6.1.4.1.259.10.1.43.104.1 - 1.3.6.1.4.1.259.10.1.43.102.26/
1.3.6.1.4.1.259.10.1.43.101.52
Taking delta samples every 30 seconds,
Rising threshold is 892800, assigned to event 0
Falling threshold is 446400, assigned to event 0

Command Mode

Global Configuration

Command Usage

- If an event is already defined for an index, the entry must be deleted before any changes can be made with this command.

- If the current value is greater than or equal to the rising threshold, and the last sample value was less than this threshold, then an alarm will be generated. After a rising event has been generated, another such event will not be

generated until the sampled value has fallen below the rising threshold, reaches the falling threshold, and again moves back up to the rising threshold.

- If the current value is less than or equal to the falling threshold, and the last sample value was greater than this threshold, then an alarm will be generated. After a falling event has been generated, another such event will not be generated until the sampled value has risen above the falling threshold, reaches the rising threshold, and again moves back down to the failing threshold.

Example

```
Console(config)#rmon alarm 1 1.3.6.1.2.1.16.1.1.1.6.1 15 delta
  rising-threshold 100 1 falling-threshold 30 1 owner mike
Console(config)#
```

rmon event

This command creates a response event for an alarm. Use the **no** form to remove an event.

Syntax

rmon event *index* [**log**] | [**trap** *community*] | [**description** *string*] | [**owner** *name*]

no rmon event *index*

index – Index to this entry. (Range: 1-65535)

log – Generates an RMON log entry when the event is triggered. Log messages are processed based on the current configuration settings for event logging (see "Event Logging" on page 124).

trap – Sends a trap message to all configured trap managers (see the snmp-server host command).

community – A password-like community string sent with the trap operation to SNMP v1 and v2c hosts. Although this string can be set using the **rmon event** command by itself, it is recommended that the string be defined using the snmp-server community command prior to using the rmon event command. (Range: 1-32 characters)

string – A comment that describes this event. (Range: 1-127 characters)

name – Name of the person who created this entry. (Range: 1-32 characters)

Default Setting

None

Command Mode

Global Configuration

Command Usage

- If an event is already defined for an index, the entry must be deleted before any changes can be made with this command.
- The specified events determine the action to take when an alarm triggers this event. The response to an alarm can include logging the alarm or sending a message to a trap manager.

Example

```
Console(config)#rmon event 2 log description urgent owner mike
Console(config)#
```

rmon collection history

This command periodically samples statistics on a physical interface. Use the no form to disable periodic sampling.

Syntax

rmon collection history controlEntry *index*
[**buckets** *number* [**interval** *seconds*]] |
[**interval** *seconds*] |
[**owner** *name* [**buckets** *number* [**interval** *seconds*]]

no rmon collection history controlEntry *index*

index – Index to this entry. (Range: 1-65535)

number – The number of buckets requested for this entry. (Range: 1-65536)

seconds – The polling interval. (Range: 1-3600 seconds)

name – Name of the person who created this entry. (Range: 1-32 characters)

Default Setting

1.3.6.1.4.1.259.10.1.43.104.1 - 1.3.6.1.4.1.259.10.1.43.104.102.52
Buckets: 8
Interval: 30 seconds for even numbered entries,
1800 seconds for odd numbered entries

Command Mode

Interface Configuration (Ethernet)

Command Usage

- By default, each index number equates to a port on the switch, but can be changed to any number not currently in use.
- If periodic sampling is already enabled on an interface, the entry must be deleted before any changes can be made with this command.

- The information collected for each sample includes:

  input octets, packets, broadcast packets, multicast packets, undersize packets, oversize packets, fragments, jabbers, CRC alignment errors, collisions, drop events, and network utilization.

- The switch reserves two controlEntry index entries for each port. If a default index entry is re-assigned to another port by this command, the show running-config command will display a message indicating that this index is not available for the port to which is normally assigned.

  For example, if control entry 15 is assigned to port 5 as shown below, the **show running-config** command will indicate that this entry is not available for port 8.

```
Console(config)#interface ethernet 1/5
Console(config-if)#rmon collection history controlEntry 15
Console(config-if)#end
Console#show running-config
!
interface ethernet 1/5
 rmon collection history controlEntry 15 buckets 50 interval 1800
...
interface ethernet 1/8
 no rmon collection history controlEntry 15
```

Example

```
Console(config)#interface ethernet 1/1
Console(config-if)#rmon collection history controlentry 21 owner mike buckets
  24 interval 60
Console(config-if)#
```

rmon collection rmon1

This command enables the collection of statistics on a physical interface. Use the no form to disable statistics collection.

Syntax

rmon collection rmon1 controlEntry *index* [**owner** *name*]

no rmon collection rmon1 controlEntry *index*

index – Index to this entry. (Range: 1-65535)

name – Name of the person who created this entry. (Range: 1-32 characters)

Default Setting

Enabled

Command Mode

Interface Configuration (Ethernet)

Command Usage

- By default, each index number equates to a port on the switch, but can be changed to any number not currently in use.
- If statistics collection is already enabled on an interface, the entry must be deleted before any changes can be made with this command.
- The information collected for each entry includes:

  input octets, packets, broadcast packets, multicast packets, undersize packets, oversize packets, fragments, jabbers, CRC alignment errors, collisions, drop events, and packets of specified lengths

Example

```
Console(config)#interface ethernet 1/1
Console(config-if)#rmon collection rmon1 controlentry 1 owner mike
Console(config-if)#
```

show rmon alarms

This command shows the settings for all configured alarms.

Command Mode

Privileged Exec

Example

```
Console#show rmon alarms
Alarm 1 is valid, owned by
 Monitors 1.3.6.1.2.1.16.1.1.1.6.1 every 30 seconds
 Taking delta samples, last value was 0
 Rising threshold is 892800, assigned to event 0
 Falling threshold is 446400, assigned to event 0
⋮
```

show rmon events

This command shows the settings for all configured events.

Command Mode

Privileged Exec

Example

```
Console#show rmon events
Event 2 is valid, owned by mike
 Description is urgent
 Event firing causes log and trap to community , last fired  00:00:00
Console#
```

show rmon history

This command shows the sampling parameters configured for each entry in the history group.

Command Mode

Privileged Exec

Example

```
Console#show rmon history
Entry 1 is valid, and owned by
 Monitors 1.3.6.1.2.1.2.2.1.1.1 every 1800 seconds
 Requested # of time intervals, ie buckets, is 8
 Granted # of time intervals, ie buckets, is 8
  Sample # 1 began measuring at 00:00:01
  Received 77671 octets, 1077 packets,
  61 broadcast and 978 multicast packets,
  0 undersized and 0 oversized packets,
  0 fragments and 0 jabbers packets,
  0 CRC alignment errors and 0 collisions.
  # of dropped packet events is 0
  Network utilization is estimated at 0
⋮
```

show rmon statistics

This command shows the information collected for all configured entries in the statistics group.

Command Mode

Privileged Exec

Example

```
Console#show rmon statistics
Interface 1 is valid, and owned by
 Monitors 1.3.6.1.2.1.2.2.1.1.1 which has
 Received 164289 octets, 2372 packets,
 120 broadcast and 2211 multicast packets,
 0 undersized and 0 oversized packets,
 0 fragments and 0 jabbers,
 0 CRC alignment errors and 0 collisions.
 # of dropped packet events (due to lack of resources): 0
 # of packets received of length (in octets):
  64: 2245, 65-127: 87, 128-255: 31,
  256-511: 5, 512-1023: 2, 1024-1518: 2
⋮
```

7 Flow Sampling Commands

Flow sampling (sFlow) can be used with a remote sFlow Collector to provide an accurate, detailed and real-time overview of the types and levels of traffic present on the network. The sFlow Agent samples 1 out of *n* packets from all data traversing the switch, re-encapsulates the samples as sFlow datagrams and transmits them to the sFlow Collector. This sampling occurs at the internal hardware level where all traffic is seen, whereas traditional probes only have a partial view of traffic as it is sampled at the monitored interface. Moreover, the processor and memory load imposed by the sFlow agent is minimal since local analysis does not take place.

Note: The terms "collector", "receiver" and "owner", in the context of this chapter, all refer to a remote server capable of receiving the sFlow datagrams generated by the sFlow agent of the switch.

Table 35: sFlow Commands

Command	Function	Mode
sflow owner	Creates an sFlow collector which the switch uses to send samples to.	PE
sflow polling instance	Configures an sFlow polling data source that takes samples periodically based on time.	PE
sflow sampling instance	Configures an sFlow sampling data source that samples periodically based on a packet count.	PE
show sflow	Shows the global and interface settings for the sFlow process	PE

sflow owner

This command creates an sFlow collector on the switch. Use the **no** form to remove the sFlow receiver.

Syntax

sflow owner *owner-name* **timeout** *timeout-value*
[**destination** {*ipv4-address* | *ipv6-address*}] [**port** *destination-udp-port*]
[**max-datagram-size** *max-datagram-size*] [**version** {**v4** | **v5**}]

no sflow owner *owner-name*

owner-name - Name of the collector. (Range: 1-30 alphanumeric characters)

timeout-value - The length of time the sFlow interface is available to send samples to a receiver, after which the owner and associated polling and

sampling data source instances are removed from the configuration. (Range: 30-10000000 seconds)

ipv4-address - IPv4 address of the sFlow collector. Valid IPv4 addresses consist of four decimal numbers, 0 to 255, separated by periods.

ipv6-address - IPv6 address of the sFlow collector. A full IPv6 address including the network prefix and host address bits. An IPv6 address consists of 8 colon-separated 16-bit hexadecimal values. One double colon may be used to indicate the appropriate number of zeros required to fill the undefined fields.

destination-udp-port - The UDP port on which the collector is listening for sFlow streams. (Range: 1-65535)

max-datagram-size - The maximum size of the sFlow datagram payload. (Range: 200-1500 bytes)

version {**v4** | **v5**} - Sends either v4 or v5 sFlow datagrams to the receiver.

Default Setting

No owner is configured
UDP Port: 6343
Version: v4
Maximum Datagram Size: 1400 bytes

Command Mode

Privileged Exec

Command Usage

- Use the **sflow owner** command to create an owner instance of an sFlow collector. If the socket port, maximum datagram size, and datagram version are not specified, then the default values are used.
- Once an owner is created, the **sflow owner** command can again be used to modify the owner's port number. All other parameter values for the owner will be retained if the port is modified.
- Use the **no sflow owner** command to remove the collector.
- When the **sflow owner** command is issued, it's associated timeout value will immediately begin to count down. Once the timeout value has reached zero seconds, the sFlow owner and it's associated sampling sources will be deleted from the configuration.

Example

This example shows an sflow collector being created on the switch.

```
Console(config)#sflow owner stat_server1 timeout 100 destination
  192.168.220.225 port 22500 max-datagram-size 512 version v5
Console(config)#
```

This example shows how to modify the sFlow port number for an already configured collector.

```
Console(config)#sflow owner stat_server1 timeout 100 port 35100
Console(config)#
```

sflow polling instance

This command enables an sFlow polling data source, for a specified interface, that polls periodically based on a specified time interval. Use the **no** form to remove the polling data source instance from the switch's sFlow configuration.

Syntax

sflow polling {**interface** *interface*} **instance** *instance-id* **receiver** *owner-name* **polling-interval** *seconds*

no sflow polling {**interface** *interface*} **instance** *instance-id*

interface - The source from which the samples will be taken at specified intervals and sent to a collector.

ethernet *unit/port*

unit - Unit identifier. (Range: 1)

port - Port number. (Range: 1-52)

instance-id - An instance ID used to identify the sampling source. (Range: 1)

owner-name - The associated receiver, to which the samples will be sent. (Range: 1-30 alphanumeric characters)

polling-interval - The time interval at which the sFlow process adds counter values to the sample datagram. (Range: 30-10000000 seconds, 0 disables this feature)

Default Setting

No sFlow polling instance is configured.

Command Mode

Privileged Exec

Command Usage

This command enables a polling data source and configures the interval at which counter values are added to the sample datagram.

Example

This example sets the polling interval to 10 seconds.

```
Console(config)#interface ethernet 1/9
Console(config-if)#sflow polling-interval 10
Console(config-if)#
```

sflow sampling instance

This command enables an sFlow data source instance for a specific interface that takes samples periodically based on the number of packets processed. Use the **no** form to remove the sampling data source instance from the switch's sFlow configuration.

Syntax

sflow sampling {**interface** *interface*} **instance** *instance-id* **receiver** *owner-name* **sampling-rate** *sample-rate* [**max-header-size** *max-header-size*]

no sflow sample {**interface** *interface*} **instance** *instance-id*

interface - The source from which the samples will be taken and sent to a collector.

ethernet *unit/port*

unit - Unit identifier. (Range: 1)

port - Port number. (Range: 1-52)

instance-id - An instance ID used to identify the sampling source. (Range: 1)

owner-name - The associated receiver, to which the samples will be sent. (Range: 1-30 alphanumeric characters)

sample-rate - The packet sampling rate, or the number of packets out of which one sample will be taken. (Range: 256-16777215 packets)

max-header-size - The maximum size of the sFlow datagram header. (Range: 64-256 bytes)

Default Setting

No sFlow sampling instance id configured.
Maximum Header Size: 128 bytes

Command Mode

Privileged Exec

Example

This example enables a sampling data source on Ethernet interface 1/1, an associated receiver named "owner1", and a sampling rate of one out of 100. The maximum header size is also set to 200 bytes.

```
Console# sflow sampling interface ethernet 1/1 instance 1 receiver owner1
  sampling-rate 100 max-header-size 200
Console#
```

The following command removes a sampling data source from Ethernet interface 1/1.

```
Console# no sflow sampling interface ethernet 1/1 instance 1
Console#
```

show sflow

This command shows the global and interface settings for the sFlow process.

Syntax

show sflow [**owner** *owner-name* | **interface** *interface*]

owner-name - The associated receiver, to which the samples are sent. (Range: 1-30 alphanumeric characters)

interface

ethernet *unit/port*

unit - Unit identifier. (Range: 1)

port - Port number. (Range: 1-52)

Command Mode

Privileged Exec

Example

```
Console#show sflow interface ethernet 1/2

  Receiver Owner Name   : stat1
  Receiver Timeout      : 99633 sec
  Receiver Destination  : 192.168.32.32
  Receiver Socket Port  : 6343
  Maximum Datagram Size : 1400 bytes
  Datagram Version      : 4

  Data Source           : Eth 1/2
  Sampling Instance ID  : 1
  Sampling Rate         : 512
  Maximum Header Size   : 128 bytes

Console#
```

8 Authentication Commands

You can configure this switch to authenticate users logging into the system for management access using local or remote authentication methods. Port-based authentication using IEEE 802.1X can also be configured to control either management access to the uplink ports or client access[3] to the data ports.

Table 36: Authentication Commands

Command Group	Function
User Accounts and Privilege Levels	Configures the basic user names and passwords for management access, and assigns a privilege level to specified command groups or individual commands
Authentication Sequence	Defines logon authentication method and precedence
RADIUS Client	Configures settings for authentication via a RADIUS server
TACACS+ Client	Configures settings for authentication via a TACACS+ server
AAA	Configures authentication, authorization, and accounting for network access
Web Server	Enables management access via a web browser
Telnet Server	Enables management access via Telnet
Secure Shell	Provides secure replacement for Telnet
802.1X Port Authentication	Configures host authentication on specific ports using 802.1X
Management IP Filter	Configures IP addresses that are allowed management access

3. For other methods of controlling client access, see "General Security Measures" on page 259.

User Accounts and Privilege Levels

The basic commands required for management access and assigning command privilege levels are listed in this section. This switch also includes other options for password checking via the console or a Telnet connection (page 113), user authentication via a remote authentication server (page 199), and host access authentication for specific ports (page 243).

Table 37: User Access Commands

Command	Function	Mode
enable password	Sets a password to control access to the Privileged Exec level	GC
username	Establishes a user name-based authentication system at login	GC
privilege	Assigns a privilege level to specified command groups or individual commands	GC
show privilege	Shows the privilege level for the current user, or the privilege level for commands modified by the privilege command	PE

enable password

After initially logging onto the system, you should set the Privileged Exec password. Remember to record it in a safe place. This command controls access to the Privileged Exec level from the Normal Exec level. Use the **no** form to reset the default password.

Syntax

enable password [**level** *level*] {**0** | **7**} *password*

no enable password [**level** *level*]

level *level* - Sets the command access privileges. (Range: 0-15)

Level 0, 8 and 15 are designed for users (guest), managers (network maintenance), and administrators (top-level access). The other levels can be used to configured specialized access profiles.

Level 0-7 provide the same default access privileges, all within Normal Exec mode under the "Console>" command prompt.

Level 8-14 provide the same default access privileges, including additional commands in Normal Exec mode, and a subset of commands in Privileged Exec mode under the "Console#" command prompt.

Level 15 provides full access to all commands.

The privilege level associated with any command can be changed using the privilege command.

{**0** | **7**} - 0 means plain password, 7 means encrypted password.

password - Password for this privilege level.
(Maximum length: 32 characters plain text or encrypted, case sensitive)

Default Setting

The default is level 15.
The default password is "super"

Command Mode

Global Configuration

Command Usage

- You cannot set a null password. You will have to enter a password to change the command mode from Normal Exec to Privileged Exec with the enable command.

- The encrypted password is required for compatibility with legacy password settings (i.e., plain text or encrypted) when reading the configuration file during system bootup. There is no need for you to manually configure encrypted passwords.

Example

```
Console(config)#enable password level 15 0 admin
Console(config)#
```

Related Commands

enable (79)
authentication enable (204)

username

This command adds named users, requires authentication at login, specifies or changes a user's password (or specify that no password is required), or specifies or changes a user's access level. Use the **no** form to remove a user name.

Syntax

username *name* {**access-level** *level* | **nopassword** | **password** {**0** | **7**} *password*}

no username *name*

name - The name of the user. (Maximum length: 32 characters, case sensitive. Maximum users: 16)

The device has two predefined users, **guest** which is assigned privilege level **0** (Normal Exec) and has access to a limited number of commands, and **admin** which is assigned privilege level 15 and has full access to all commands.

access-level *level* - Specifies command access privileges. (Range: 0-15)

Level 0, 8 and 15 are designed for users (guest), managers (network maintenance), and administrators (top-level access). The other levels can be used to configured specialized access profiles.

Level 0-7 provide the same default access privileges, all within Normal Exec mode under the "Console>" command prompt.

Level 8-14 provide the same default access privileges, including additional commands in Normal Exec mode, and a subset of commands in Privileged Exec mode under the "Console#" command prompt.

Level 15 provides full access to all commands.

The privilege level associated with any command can be changed using the privilege command.

Any privilege level can access all of the commands assigned to lower privilege levels. For example, privilege level 8 can access all commands assigned to privilege levels 7-0 according to default settings, and to any other commands assigned to levels 7-0 using the privilege command.

nopassword - No password is required for this user to log in.

{**0** | **7**} - 0 means plain password, 7 means encrypted password.

password *password* - The authentication password for the user. (Maximum length: 32 characters plain text or encrypted, case sensitive)

Default Setting

The default access level is 0 (Normal Exec).
The factory defaults for the user names and passwords are:

Table 38: Default Login Settings

username	access-level	password
guest	0	guest
admin	15	admin

Command Mode

Global Configuration

Command Usage

The encrypted password is required for compatibility with legacy password settings (i.e., plain text or encrypted) when reading the configuration file during system bootup. There is no need for you to manually configure encrypted passwords.

Example

This example shows how the set the access level and password for a user.

```
Console(config)#username bob access-level 15
Console(config)#username bob password 0 smith
Console(config)#
```

privilege

This command assigns a privilege level to specified command groups or individual commands. Use the **no** form to restore the default setting.

Syntax

privilege *mode* [**all**] **level** *level command*

no privilege *mode* [**all**] *command*

mode - The configuration mode containing the specified *command*. (See "Understanding Command Modes" on page 70 and "Configuration Commands" on page 71.)

all - Modifies the privilege level for all subcommands under the specified *command*.

level *level* - Specifies the privilege level for the specified *command*. Refer to the default settings described for the access level parameter under the username command. (Range: 0-15)

command - Specifies any command contained within the specified *mode*.

Default Setting

Privilege level 0 provides access to a limited number of the commands which display the current status of the switch, as well as several database clear and reset functions. Level 8 provides access to all display status and configuration commands, except for those controlling various authentication and security features. Level 15 provides full access to all commands.

Command Mode

Global Configuration

Example

This example sets the privilege level for the ping command to Privileged Exec.

```
Console(config)#privilege exec level 15 ping
Console(config)#
```

show privilege

This command shows the privilege level for the current user, or the privilege level for commands modified by the privilege command.

Syntax

show privilege [**command**]

command - Displays the privilege level for all commands modified by the privilege command.

Command Mode

Privileged Exec

Example

This example shows the privilege level for any command modified by the privilege command.

```
Console#show privilege command
privilege line all level 0 accounting
privilege exec level 15 ping
Console(config)#
```

Authentication Sequence

Three authentication methods can be specified to authenticate users logging into the system for management access. The commands in this section can be used to define the authentication method and sequence.

Table 39: Authentication Sequence Commands

Command	Function	Mode
authentication enable	Defines the authentication method and precedence for command mode change	GC
authentication login	Defines logon authentication method and precedence	GC

authentication enable

This command defines the authentication method and precedence to use when changing from Exec command mode to Privileged Exec command mode with the enable command. Use the **no** form to restore the default.

Syntax

authentication enable {[**local**] [**radius**] [**tacacs**]}

no authentication enable

local - Use local password only.

radius - Use RADIUS server password only.

tacacs - Use TACACS server password.

Default Setting

Local

Command Mode

Global Configuration

Command Usage

- RADIUS uses UDP while TACACS+ uses TCP. UDP only offers best effort delivery, while TCP offers a connection-oriented transport. Also, note that RADIUS encrypts only the password in the access-request packet from the client to the server, while TACACS+ encrypts the entire body of the packet.

- RADIUS and TACACS+ logon authentication assigns a specific privilege level for each user name and password pair. The user name, password, and privilege level must be configured on the authentication server.

- You can specify three authentication methods in a single command to indicate the authentication sequence. For example, if you enter "**authentication enable radius tacacs local**," the user name and password on the RADIUS server is verified first. If the RADIUS server is not available, then authentication is attempted on the TACACS+ server. If the TACACS+ server is not available, the local user name and password is checked.

Example

```
Console(config)#authentication enable radius
Console(config)#
```

Related Commands

enable password - sets the password for changing command modes (200)

authentication login

This command defines the login authentication method and precedence. Use the **no** form to restore the default.

Syntax

authentication login {[**local**] [**radius**] [**tacacs**]}

no authentication login

local - Use local password.

radius - Use RADIUS server password.

tacacs - Use TACACS server password.

Default Setting

Local

Command Mode

Global Configuration

Command Usage

- RADIUS uses UDP while TACACS+ uses TCP. UDP only offers best effort delivery, while TCP offers a connection-oriented transport. Also, note that RADIUS encrypts only the password in the access-request packet from the client to the server, while TACACS+ encrypts the entire body of the packet.

- RADIUS and TACACS+ logon authentication assigns a specific privilege level for each user name and password pair. The user name, password, and privilege level must be configured on the authentication server.

- You can specify three authentication methods in a single command to indicate the authentication sequence. For example, if you enter "**authentication login radius tacacs local**," the user name and password on the RADIUS server is verified first. If the RADIUS server is not available, then authentication is attempted on the TACACS+ server. If the TACACS+ server is not available, the local user name and password is checked.

Example

```
Console(config)#authentication login radius
Console(config)#
```

Related Commands

username - for setting the local user names and passwords (201)

RADIUS Client

Remote Authentication Dial-in User Service (RADIUS) is a logon authentication protocol that uses software running on a central server to control access to RADIUS-aware devices on the network. An authentication server contains a database of multiple user name/password pairs with associated privilege levels for each user or group that require management access to a switch.

Table 40: RADIUS Client Commands

Command	Function	Mode
radius-server acct-port	Sets the RADIUS server network port	GC
radius-server auth-port	Sets the RADIUS server network port	GC
radius-server host	Specifies the RADIUS server	GC
radius-server key	Sets the RADIUS encryption key	GC
radius-server retransmit	Sets the number of retries	GC
radius-server timeout	Sets the interval between sending authentication requests	GC
show radius-server	Shows the current RADIUS settings	PE

radius-server acct-port

This command sets the RADIUS server network port for accounting messages. Use the **no** form to restore the default.

Syntax

radius-server acct-port *port-number*

no radius-server acct-port

port-number - RADIUS server UDP port used for accounting messages. (Range: 1-65535)

Default Setting
1813

Command Mode
Global Configuration

Example

```
Console(config)#radius-server acct-port 181
Console(config)#
```

radius-server auth-port

This command sets the RADIUS server network port. Use the **no** form to restore the default.

Syntax

radius-server auth-port *port-number*

no radius-server auth-port

port-number - RADIUS server UDP port used for authentication messages. (Range: 1-65535)

Default Setting
1812

Command Mode
Global Configuration

Example

```
Console(config)#radius-server auth-port 181
Console(config)#
```

radius-server host

This command specifies primary and backup RADIUS servers, and authentication and accounting parameters that apply to each server. Use the **no** form to remove a specified server, or to restore the default values.

Syntax

[**no**] **radius-server** *index* **host** *host-ip-address* [**acct-port** *acct-port*] [**auth-port** *auth-port*] [**key** *key*] [**retransmit** *retransmit*] [**timeout** *timeout*]

index - Allows you to specify up to five servers. These servers are queried in sequence until a server responds or the retransmit period expires.

host-ip-address - IP address of server.

acct-port - RADIUS server UDP port used for accounting messages. (Range: 1-65535)

auth-port - RADIUS server UDP port used for authentication messages. (Range: 1-65535)

key - Encryption key used to authenticate logon access for client. Enclose any string containing blank spaces in double quotes. (Maximum length: 48 characters)

retransmit - Number of times the switch will try to authenticate logon access via the RADIUS server. (Range: 1-30)

timeout - Number of seconds the switch waits for a reply before resending a request. (Range: 1-65535)

Default Setting

auth-port - 1812
acct-port - 1813
timeout - 5 seconds
retransmit - 2

Command Mode

Global Configuration

Example

```
Console(config)#radius-server 1 host 192.168.1.20 port 181 timeout 10
  retransmit 5 key green
Console(config)#
```

radius-server key

This command sets the RADIUS encryption key. Use the **no** form to restore the default.

Syntax

radius-server key *key-string*

no radius-server key

key-string - Encryption key used to authenticate logon access for client. Enclose any string containing blank spaces in double quotes. (Maximum length: 48 characters)

Default Setting

None

Command Mode

Global Configuration

Example

```
Console(config)#radius-server key green
Console(config)#
```

radius-server retransmit

This command sets the number of retries. Use the **no** form to restore the default.

Syntax

radius-server retransmit *number-of-retries*

no radius-server retransmit

number-of-retries - Number of times the switch will try to authenticate logon access via the RADIUS server. (Range: 1 - 30)

Default Setting

2

Command Mode

Global Configuration

Example

```
Console(config)#radius-server retransmit 5
Console(config)#
```

radius-server timeout

This command sets the interval between transmitting authentication requests to the RADIUS server. Use the **no** form to restore the default.

Syntax

radius-server timeout *number-of-seconds*

no radius-server timeout

number-of-seconds - Number of seconds the switch waits for a reply before resending a request. (Range: 1-65535)

Default Setting

5

Command Mode

Global Configuration

Example

```
Console(config)#radius-server timeout 10
Console(config)#
```

show radius-server

This command displays the current settings for the RADIUS server.

Default Setting

None

Command Mode

Privileged Exec

Example

```
Console#show radius-server

Remote RADIUS Server Configuration:

Global Settings:
 Authentication Port Number : 1812
 Accounting Port Number     : 1813
 Retransmit Times           : 2
 Request Timeout            : 5

Server 1:
 Server IP Address          : 192.168.1.1
 Authentication Port Number : 1812
 Accounting Port Number     : 1813
 Retransmit Times           : 2
 Request Timeout            : 5

RADIUS Server Group:
Group Name                Member Index
------------------------- -------------
radius                    1
Console#
```

TACACS+ Client

Terminal Access Controller Access Control System (TACACS+) is a logon authentication protocol that uses software running on a central server to control access to TACACS-aware devices on the network. An authentication server contains a database of multiple user name/password pairs with associated privilege levels for each user or group that require management access to a switch.

Table 41: TACACS+ Client Commands

Command	Function	Mode
tacacs-server host	Specifies the TACACS+ server and optional parameters	GC
tacacs-server key	Sets the TACACS+ encryption key	GC
tacacs-server port	Specifies the TACACS+ server network port	GC
tacacs-server retransmit	Sets the number of retries	GC
tacacs-server timeout	Sets the interval between sending authentication requests	GC
show tacacs-server	Shows the current TACACS+ settings	GC

tacacs-server host

This command specifies the TACACS+ server and other optional parameters. Use the **no** form to remove the server, or to restore the default values.

Syntax

tacacs-server *index* **host** *host-ip-address* [**key** *key*] [**port** *port-number*] [**retransmit** *retransmit*] [**timeout** *timeout*]

no tacacs-server *index*

index - The index for this server. (Range: 1)

host-ip-address - IP address of a TACACS+ server.

key - Encryption key used to authenticate logon access for the client. Enclose any string containing blank spaces in double quotes. (Maximum length: 48 characters)

port-number - TACACS+ server TCP port used for authentication messages. (Range: 1-65535)

retransmit - Number of times the switch will try to authenticate logon access via the TACACS+ server. (Range: 1-30)

timeout - Number of seconds the switch waits for a reply before resending a request. (Range: 1-540)

Default Setting

authentication port - 49
timeout - 5 seconds
retransmit - 2

Command Mode

Global Configuration

Example

```
Console(config)#tacacs-server 1 host 192.168.1.25 port 181 timeout 10
  retransmit 5 key green
Console(config)#
```

tacacs-server key

This command sets the TACACS+ encryption key. Use the **no** form to restore the default.

Syntax

tacacs-server key *key-string*

no tacacs-server key

key-string - Encryption key used to authenticate logon access for the client. Enclose any string containing blank spaces in double quotes. (Maximum length: 48 characters)

Default Setting
None

Command Mode
Global Configuration

Example

```
Console(config)#tacacs-server key green
Console(config)#
```

tacacs-server port

This command specifies the TACACS+ server network port. Use the **no** form to restore the default.

Syntax

tacacs-server port *port-number*

no tacacs-server port

port-number - TACACS+ server TCP port used for authentication messages. (Range: 1-65535)

Default Setting
49

Command Mode
Global Configuration

Example

```
Console(config)#tacacs-server port 181
Console(config)#
```

tacacs-server retransmit

This command sets the number of retries. Use the **no** form to restore the default.

Syntax

tacacs-server retransmit *number-of-retries*

no tacacs-server retransmit

number-of-retries - Number of times the switch will try to authenticate logon access via the TACACS+ server. (Range: 1 - 30)

Default Setting
2

Command Mode
Global Configuration

Example

```
Console(config)#tacacs-server retransmit 5
Console(config)#
```

tacacs-server timeout

This command sets the interval between transmitting authentication requests to the TACACS+ server. Use the **no** form to restore the default.

Syntax

tacacs-server timeout *number-of-seconds*

no tacacs-server timeout

number-of-seconds - Number of seconds the switch waits for a reply before resending a request. (Range: 1-540)

Default Setting

5

Command Mode

Global Configuration

Example

```
Console(config)#tacacs-server timeout 10
Console(config)#
```

show tacacs-server

This command displays the current settings for the TACACS+ server.

Default Setting

None

Command Mode

Privileged Exec

Example

```
Console#show tacacs-server

Remote TACACS+ Server Configuration:

Global Settings:
 Server Port Number : 49
 Retransmit Times   : 2
 Timeout            : 5

Server 1:
 Server IP Address  : 10.11.12.13
 Server Port Number : 49
 Retransmit Times   : 2
 Timeout            : 4
```

```
TACACS+ Server Group:
Group Name                 Member Index
------------------------- -------------
tacacs+                    1
Console#
```

AAA

The Authentication, Authorization, and Accounting (AAA) feature provides the main framework for configuring access control on the switch. The AAA functions require the use of configured RADIUS or TACACS+ servers in the network.

Table 42: AAA Commands

Command	Function	Mode
aaa accounting commands	Enables accounting of Exec mode commands	GC
aaa accounting dot1x	Enables accounting of 802.1X services	GC
aaa accounting exec	Enables accounting of Exec services	GC
aaa accounting update	Enables periodoc updates to be sent to the accounting server	GC
aaa authorization commands	Enables accounting of Exec mode commands	GC
aaa authorization exec	Enables authorization of Exec sessions	GC
aaa group server	Groups security servers in to defined lists	GC
server	Configures the IP address of a server in a group list	SG
accounting dot1x	Applies an accounting method to an interface for 802.1X service requests	IC
accounting commands	Applies an accounting method to CLI commands entered by a user	Line
accounting exec	Applies an accounting method to local console, Telnet or SSH connections	Line
authorization commands	Applies an authorization method to CLI commands entered by a user	Line
authorization exec	Applies an authorization method to local console, Telnet or SSH connections	Line
show accounting	Displays all accounting information	PE
show authorization	Displays all authorization information	PE

aaa accounting commands

This command enables the accounting of Exec mode commands. Use the **no** form to disable the accounting service.

Syntax

aaa accounting commands *level* {**default** | *method-name*} **start-stop group** {**tacacs+** | *server-group*}

no aaa accounting commands *level* {**default** | *method-name*}

level - The privilege level for executing commands. (Range: 0-15)

default - Specifies the default accounting method for service requests.

method-name - Specifies an accounting method for service requests. (Range: 1-64 characters)

start-stop - Records accounting from starting point and stopping point.

group - Specifies the server group to use.

tacacs+ - Specifies all TACACS+ hosts configured with the tacacs-server host command.

server-group - Specifies the name of a server group configured with the aaa group server command. (Range: 1-64 characters)

Default Setting

Accounting is not enabled
No servers are specified

Command Mode

Global Configuration

Command Usage

- The accounting of Exec mode commands is only supported by TACACS+ servers.
- Note that the **default** and *method-name* fields are only used to describe the accounting method(s) configured on the specified TACACS+ server, and do not actually send any information to the server about the methods to use.

Example

```
Console(config)#aaa accounting commands 15 default start-stop group tacacs+
Console(config)#
```

aaa accounting dot1x

This command enables the accounting of requested 802.1X services for network access. Use the **no** form to disable the accounting service.

Syntax

aaa accounting dot1x {**default** | *method-name*}
start-stop group {**radius** | **tacacs+** |*server-group*}

no aaa accounting dot1x {**default** | *method-name*}

default - Specifies the default accounting method for service requests.

method-name - Specifies an accounting method for service requests. (Range: 1-64 characters)

start-stop - Records accounting from starting point and stopping point.

group - Specifies the server group to use.

radius - Specifies all RADIUS hosts configure with the radius-server host command.

tacacs+ - Specifies all TACACS+ hosts configure with the tacacs-server host command.

server-group - Specifies the name of a server group configured with the aaa group server command. (Range: 1-64 characters)

Default Setting

Accounting is not enabled
No servers are specified

Command Mode

Global Configuration

Command Usage

Note that the **default** and *method-name* fields are only used to describe the accounting method(s) configured on the specified RADIUS or TACACS+ servers, and do not actually send any information to the servers about the methods to use.

Example

```
Console(config)#aaa accounting dot1x default start-stop group radius
Console(config)#
```

aaa accounting exec

This command enables the accounting of requested Exec services for network access. Use the **no** form to disable the accounting service.

Syntax

aaa accounting exec {**default** | *method-name*}
start-stop group {**radius** | **tacacs+** |*server-group*}

no aaa accounting exec {**default** | *method-name*}

default - Specifies the default accounting method for service requests.

method-name - Specifies an accounting method for service requests. (Range: 1-64 characters)

start-stop - Records accounting from starting point and stopping point.

group - Specifies the server group to use.

radius - Specifies all RADIUS hosts configure with the radius-server host command.

tacacs+ - Specifies all TACACS+ hosts configure with the tacacs-server host command.

server-group - Specifies the name of a server group configured with the aaa group server command. (Range: 1-64 characters)

Default Setting

Accounting is not enabled
No servers are specified

Command Mode

Global Configuration

Command Usage

- This command runs accounting for Exec service requests for the local console and Telnet connections.
- Note that the **default** and *method-name* fields are only used to describe the accounting method(s) configured on the specified RADIUS or TACACS+ servers, and do not actually send any information to the servers about the methods to use.

Example

```
Console(config)#aaa accounting exec default start-stop group tacacs+
Console(config)#
```

aaa accounting update

This command enables the sending of periodic updates to the accounting server. Use the **no** form to disable accounting updates.

Syntax

aaa accounting update [**periodic** *interval*]

no aaa accounting update

interval - Sends an interim accounting record to the server at this interval. (Range: 1-2147483647 minutes)

Default Setting

1 minute

Command Mode

Global Configuration

Command Usage

- When accounting updates are enabled, the switch issues periodic interim accounting records for all users on the system.
- Using the command without specifying an interim interval enables updates, but does not change the current interval setting.

Example

```
Console(config)#aaa accounting update periodic 30
Console(config)#
```

aaa authorization commands

This command enables the authorization of Exec mode commands. Use the **no** form to disable the authorization service.

Syntax

aaa authorization commands *level* {**default** | *method-name*} **start-stop group** {**tacacs+** | *server-group*}

no aaa authorization commands *level* {**default** | *method-name*}

level - The privilege level for executing commands. (Range: 0-15)

default - Specifies the default authorization method for service requests.

method-name - Specifies an authorization method for service requests. (Range: 1-64 characters)

start-stop - Records authorization from starting point and stopping point.

group - Specifies the server group to use.

tacacs+ - Specifies all TACACS+ hosts configured with the tacacs-server host command.

server-group - Specifies the name of a server group configured with the aaa group server command. (Range: 1-64 characters)

Default Setting

Authorization is not enabled
No servers are specified

Command Mode

Global Configuration

Command Usage

- The authorization of Exec mode commands is only supported by TACACS+ servers.
- Note that the **default** and *method-name* fields are only used to describe the authorization method(s) configured on the specified TACACS+ server, and do not actually send any information to the server about the methods to use.

Example

```
Console(config)#aaa authorization commands 15 default start-stop group
  tacacs+
Console(config)#
```

aaa authorization exec

This command enables the authorization for Exec access. Use the **no** form to disable the authorization service.

Syntax

aaa authorization exec {**default** | *method-name*}
group {**tacacs+** | *server-group*}

no aaa authorization exec {**default** | *method-name*}

default - Specifies the default authorization method for Exec access.

method-name - Specifies an authorization method for Exec access. (Range: 1-64 characters)

group - Specifies the server group to use.

tacacs+ - Specifies all TACACS+ hosts configured with the tacacs-server host command.

server-group - Specifies the name of a server group configured with the aaa group server command. (Range: 1-64 characters)

Default Setting

Authorization is not enabled
No servers are specified

Command Mode
Global Configuration

Command Usage
- This command performs authorization to determine if a user is allowed to run an Exec shell for local console, Telnet, or SSH connections.
- AAA authentication must be enabled before authorization is enabled.
- If this command is issued without a specified named method, the default method list is applied to all interfaces or lines (where this authorization type applies), except those that have a named method explicitly defined.

Example
```
Console(config)#aaa authorization exec default group tacacs+
Console(config)#
```

aaa group server

Use this command to name a group of security server hosts. To remove a server group from the configuration list, enter the **no** form of this command.

Syntax
[**no**] **aaa group server** {**radius** | **tacacs+**} *group-name*

radius - Defines a RADIUS server group.

tacacs+ - Defines a TACACS+ server group.

group-name - A text string that names a security server group. (Range: 1-64 characters)

Default Setting
None

Command Mode
Global Configuration

Example
```
Console(config)#aaa group server radius tps
Console(config-sg-radius)#
```

server

This command adds a security server to an AAA server group. Use the **no** form to remove the associated server from the group.

Syntax

[**no**] **server** {*index* | *ip-address*}

index - Specifies the server index. (Range: RADIUS 1-5, TACACS+ 1)

ip-address - Specifies the host IP address of a server.

Default Setting

None

Command Mode

Server Group Configuration

Command Usage

- When specifying the index for a RADIUS server, that server index must already be defined by the radius-server host command.
- When specifying the index for a TACACS+ server, that server index must already be defined by the tacacs-server host command.

Example

```
Console(config)#aaa group server radius tps
Console(config-sg-radius)#server 10.2.68.120
Console(config-sg-radius)#
```

accounting dot1x

This command applies an accounting method for 802.1X service requests on an interface. Use the **no** form to disable accounting on the interface.

Syntax

accounting dot1x {**default** | *list-name*}

no accounting dot1x

default - Specifies the default method list created with the aaa accounting dot1x command.

list-name - Specifies a method list created with the aaa accounting dot1x command.

Default Setting

None

Command Mode

Interface Configuration

Example

```
Console(config)#interface ethernet 1/2
Console(config-if)#accounting dot1x tps
Console(config-if)#
```

accounting commands

This command applies an accounting method to entered CLI commands. Use the **no** form to disable accounting for entered CLI commands.

Syntax

accounting commands *level* {**default** | *list-name*}

no accounting commands *level*

level - The privilege level for executing commands. (Range: 0-15)

default - Specifies the default method list created with the aaa accounting commands command.

list-name - Specifies a method list created with the aaa accounting commands command.

Default Setting

None

Command Mode

Line Configuration

Example

```
Console(config)#line console
Console(config-line)#accounting commands 15 default
Console(config-line)#
```

accounting exec

This command applies an accounting method to local console, Telnet or SSH connections. Use the **no** form to disable accounting on the line.

Syntax

accounting exec {**default** | *list-name*}

no accounting exec

default - Specifies the default method list created with the aaa accounting exec command.

list-name - Specifies a method list created with the aaa accounting exec command.

Default Setting

None

Command Mode
Line Configuration

Example

```
Console(config)#line console
Console(config-line)#accounting exec tps
Console(config-line)#exit
Console(config)#line vty
Console(config-line)#accounting exec default
Console(config-line)#
```

authorization commands

This command applies an authorization method to entered CLI commands. Use the **no** form to disable authorization for entered CLI commands.

Syntax

authorization commands *level* {**default** | *list-name*}

no authorization commands *level*

level - The privilege level for executing commands. (Range: 0-15)

default - Specifies the default method list created with the aaa authorization commands command.

list-name - Specifies a method list created with the aaa authorization commands command.

Default Setting
None

Command Mode
Line Configuration

Example

```
Console(config)#line console
Console(config-line)#authorization commands 15 default
Console(config-line)#
```

authorization exec

This command applies an authorization method to local console, Telnet or SSH connections. Use the **no** form to disable authorization on the line.

Syntax

authorization exec {**default** | *list-name*}

no authorization exec

default - Specifies the default method list created with the aaa authorization exec command.

list-name - Specifies a method list created with the aaa authorization exec command.

Default Setting

None

Command Mode

Line Configuration

Example

```
Console(config)#line console
Console(config-line)#authorization exec tps
Console(config-line)#exit
Console(config)#line vty
Console(config-line)#authorization exec default
Console(config-line)#
```

show accounting

This command displays the current accounting settings per function and per port.

Syntax

show accounting [**commands** [*level*]] |
[[**dot1x** [**statistics** [**username** *user-name* | **interface** *interface*]] |
exec [**statistics**] | **statistics**]

commands - Displays command accounting information.

level - Displays command accounting information for a specifiable command level.

dot1x - Displays dot1x accounting information.

exec - Displays Exec accounting records.

statistics - Displays accounting records.

user-name - Displays accounting records for a specifiable username.

interface

ethernet *unit/port*

unit - Unit identifier. (Range: 1)

port - Port number. (Range: 1-52)

Default Setting

None

Command Mode

Privileged Exec

Example

```
Console#show accounting
Accounting Type : dot1x
  Method List   : default
  Group List    : radius
  Interface     : Eth 1/1

  Method List   : tps
  Group List    : radius
  Interface     : Eth 1/2

Accounting Type : EXEC
  Method List   : default
  Group List    : tacacs+
  Interface     : vty

Accounting Type : Commands 0
  Method List   : default
  Group List    : tacacs+
  Interface     :
⋮
Accounting Type : Commands 15
  Method List   : default
  Group List    : tacacs+
  Interface     :

Console#
```

show authorization

This command displays the current authorization settings per function and per port.

Syntax

show authorization [**commands** [*level*] | **exec**]

commands - Displays command authorization information.

level - Displays command authorization information for a specifiable command level.

exec - Displays Exec authorization records.

Default Setting
None

Command Mode
Privileged Exec

Example

```
Console#show authorization
Authorization Type : EXEC
  Method List    : default
  Group List     : tacacs+
  Interface      : vty

Authorization Type : Commands 0
  Method List    : default
  Group List     : tacacs+
  Interface      :
⋮
Authorization Type : Commands 15
  Method List    : default
  Group List     : tacacs+
  Interface      :

Console#
```

Web Server

This section describes commands used to configure web browser management access to the switch.

Table 43: Web Server Commands

Command	Function	Mode
ip http authentication	Sets the method list for EXEC authorization of an EXEC session	GC
ip http port	Specifies the port to be used by the web browser interface	GC
ip http server	Allows the switch to be monitored or configured from a browser	GC
ip http secure-port	Specifies the TCP port number for HTTPS	GC
ip http secure-server	Enables HTTPS (HTTP/SSL) for encrypted communications	GC
show authorization	Displays all authorization information	PE
show system	Displays system information	NE, PE

Note: Users are automatically logged off of the HTTP server or HTTPS server if no input is detected for 300 seconds.

ip http authentication

This command specifies the method list for EXEC authorization for starting an EXEC session used by the web browser interface. Use the **no** form to use the default port.

Syntax

ip http authentication aaa exec-authorization {**default** | *list-name*}

no ip http authentication aaa exec-authorization

default - Specifies the default method list used for authorization requests.

list-name - Specifies a method list created with the aaa authorization commands command.

Default Setting

None

Command Mode

Global Configuration

Example

```
Console(config)#ip http authentication aaa exec-authorization default
Console(config)#
```

Related Commands

aaa authorization commands (218)
ip http server (228)
show system (94)

ip http port

This command specifies the TCP port number used by the web browser interface. Use the **no** form to use the default port.

Syntax

ip http port *port-number*

no ip http port

port-number - The TCP port to be used by the browser interface. (Range: 1-65535)

Default Setting

80

Command Mode

Global Configuration

Example

```
Console(config)#ip http port 769
Console(config)#
```

Related Commands

ip http server (228)
show system (94)

ip http server

This command allows this device to be monitored or configured from a browser. Use the **no** form to disable this function.

Syntax

[**no**] **ip http server**

Default Setting

Enabled

Command Mode

Global Configuration

Example

```
Console(config)#ip http server
Console(config)#
```

Related Commands

ip http authentication (227)
show system (94)

ip http secure-port

This command specifies the TCP port number used for HTTPS connection to the switch's web interface. Use the **no** form to restore the default port.

Syntax

ip http secure-port *port-number*

no ip http secure-port

port-number – The TCP port used for HTTPS. (Range: 1-65535)

Default Setting

443

Command Mode

Global Configuration

Command Usage

- You cannot configure the HTTP and HTTPS servers to use the same port.
- If you change the HTTPS port number, clients attempting to connect to the HTTPS server must specify the port number in the URL, in this format: **https://** *device***:***port-number*

Example

```
Console(config)#ip http secure-port 1000
Console(config)#
```

Related Commands

ip http secure-server (229)
show system (94)

ip http secure-server

This command enables the secure hypertext transfer protocol (HTTPS) over the Secure Socket Layer (SSL), providing secure access (i.e., an encrypted connection) to the switch's web interface. Use the **no** form to disable this function.

Syntax

[**no**] **ip http secure-server**

Default Setting

Enabled

Command Mode

Global Configuration

Command Usage

- Both HTTP and HTTPS service can be enabled independently on the switch. However, you cannot configure the HTTP and HTTPS servers to use the same UDP port.
- If you enable HTTPS, you must indicate this in the URL that you specify in your browser: **https**://*device*[:*port_number*]
- When you start HTTPS, the connection is established in this way:
  - The client authenticates the server using the server's digital certificate.
  - The client and server negotiate a set of security protocols to use for the connection.
  - The client and server generate session keys for encrypting and decrypting data.

- The client and server establish a secure encrypted connection.

  A padlock icon should appear in the status bar for Internet Explorer 11, Mozilla Firefox 53, or Google Chrome 59, or more recent versions.

  The following web browsers and operating systems currently support HTTPS:

  Table 44: HTTPS System Support

Web Browser	Operating System
Internet Explorer 11 or later	Windows 7, 8, 10
Mozilla Firefox 53 or later	Windows 7, 8, 10, Linux
Google Chrome 59 or later	Windows 7, 8, 10

- To specify a secure-site certificate, see "Replacing the Default Secure-site Certificate" in the *Web Management Guide*. Also refer to the copy tftp https-certificate command.

- Connection to the web interface is not supported for HTTPS using an IPv6 link local address.

Example

```
Console(config)#ip http secure-server
Console(config)#
```

Related Commands

ip http secure-port (228)
copy tftp https-certificate (102)
show system (94)

Telnet Server

This section describes commands used to configure Telnet management access to the switch.

Table 45: Telnet Server Commands

Command	Function	Mode
ip telnet max-sessions	Specifies the maximum number of Telnet sessions that can simultaneously connect to this system	GC
ip telnet port	Specifies the port to be used by the Telnet interface	GC
ip telnet server	Allows the switch to be monitored or configured from Telnet	GC
telnet (client)	Accesses a remote device using a Telnet connection	PE
show ip telnet	Displays configuration settings for the Telnet server	PE

Note: This switch also supports a Telnet client function. A Telnet connection can be made from this switch to another device by entering the **telnet** command at the Privileged Exec configuration level.

ip telnet max-sessions

This command specifies the maximum number of Telnet sessions that can simultaneously connect to this system. Use the **no** from to restore the default setting.

Syntax

ip telnet max-sessions *session-count*

no ip telnet max-sessions

session-count - The maximum number of allowed Telnet session. (Range: 0-8)

Default Setting

8 sessions

Command Mode

Global Configuration

Command Usage

A maximum of eight sessions can be concurrently opened for Telnet and Secure Shell (i.e., both Telnet and SSH share a maximum number of eight sessions).

Example

```
Console(config)#ip telnet max-sessions 1
Console(config)#
```

ip telnet port

This command specifies the TCP port number used by the Telnet interface. Use the **no** form to use the default port.

Syntax

ip telnet port *port-number*

no telnet port

port-number - The TCP port number to be used by the browser interface. (Range: 1-65535)

Default Setting

23

Command Mode
Global Configuration

Example

```
Console(config)#ip telnet port 123
Console(config)#
```

ip telnet server

This command allows this device to be monitored or configured from Telnet. Use the **no** form to disable this function.

Syntax
[**no**] **ip telnet server**

Default Setting
Enabled

Command Mode
Global Configuration

Example

```
Console(config)#ip telnet server
Console(config)#
```

telnet (client)

This command accesses a remote device using a Telnet connection.

Syntax

telnet *host*

host - IP address or alias of a remote device.

Command Mode
Privileged Exec

Example

```
Console#telnet 192.168.2.254
Connect To 192.168.2.254...

***************************************************************

WARNING - MONITORED ACTIONS AND ACCESSES

User Access Verification

Username:

Console(config)#
```

show ip telnet

This command displays the configuration settings for the Telnet server.

Command Mode

Normal Exec, Privileged Exec

Example

```
Console#show ip telnet
IP Telnet Configuration:

Telnet Status: Enabled
Telnet Service Port: 23
Telnet Max Session: 8
Console#
```

Secure Shell

This section describes the commands used to configure the SSH server. Note that you also need to install a SSH client on the management station when using this protocol to configure the switch.

Note: The switch supports both SSH Version 1.5 and 2.0 clients.

Table 46: Secure Shell Commands

Command	Function	Mode
ip ssh authentication-retries	Specifies the number of retries allowed by a client	GC
ip ssh server	Enables the SSH server on the switch	GC
ip ssh server-key size	Sets the SSH server key size	GC
ip ssh timeout	Specifies the authentication timeout for the SSH server	GC
copy tftp public-key	Copies the user's public key from a TFTP server to the switch	PE
delete public-key	Deletes the public key for the specified user	PE
disconnect	Terminates a line connection	PE
ip ssh crypto host-key generate	Generates the host key	PE
ip ssh crypto zeroize	Clear the host key from RAM	PE
ip ssh save host-key	Saves the host key from RAM to flash memory	PE
show ip ssh	Displays the status of the SSH server and the configured values for authentication timeout and retries	PE
show public-key	Shows the public key for the specified user or for the host	PE

Table 46: Secure Shell Commands (Continued)

Command	Function	Mode
show ssh	Displays the status of current SSH sessions	PE
show users	Shows SSH users, including privilege level and public key type	PE

Configuration Guidelines

The SSH server on this switch supports both password and public key authentication. If password authentication is specified by the SSH client, then the password can be authenticated either locally or via a RADIUS or TACACS+ remote authentication server, as specified by the authentication login command. If public key authentication is specified by the client, then you must configure authentication keys on both the client and the switch as described in the following section. Note that regardless of whether you use public key or password authentication, you still have to generate authentication keys on the switch and enable the SSH server.

To use the SSH server, complete these steps:

1. Generate a Host Key Pair – Use the ip ssh crypto host-key generate command to create a host public/private key pair.

2. Provide Host Public Key to Clients – Many SSH client programs automatically import the host public key during the initial connection setup with the switch. Otherwise, you need to manually create a known hosts file on the management station and place the host public key in it. An entry for a public key in the known hosts file would appear similar to the following example:

   10.1.0.54 1024 35 156849954018676692593339467750546173253136748908365472541502024559319986854435836165199992332978176606583095610825913212890233765468017262725714134287629413011961955667825956641048695742788814620651941746772984865468615717739390164779355942303577413098022737087794545240839717526463580581767167095748047761 17

3. Import Client's Public Key to the Switch – Use the copy tftp public-key command to copy a file containing the public key for all the SSH client's granted management access to the switch. (Note that these clients must be configured locally on the switch with the username command.) The clients are subsequently authenticated using these keys. The current firmware only accepts public key files based on standard UNIX format as shown in the following example for an RSA key:

   1024 35
   134108168560989392104094492015542534763164192187295892114317388005553616163105
   177594083868631109291232226828519254374603100937187721199696317813662774141689
   851320491172048303392543241016379975923714490119380060902539484084827178194372
   288402533115952134861022902978982721353267131629432532818915045306393916643
   steve@192.168.1.19

4. Set the Optional Parameters – Set other optional parameters, including the authentication timeout, the number of retries, and the server key size.

5. Enable SSH Service – Use the ip ssh server command to enable the SSH server on the switch.

6. *Authentication* – One of the following authentication methods is employed:

   Password Authentication (for SSH v1.5 or V2 Clients)

   a. The client sends its password to the server.
   b. The switch compares the client's password to those stored in memory.
   c. If a match is found, the connection is allowed.

Note: To use SSH with only password authentication, the host public key must still be given to the client, either during initial connection or manually entered into the known host file. However, you do not need to configure the client's keys.

   Public Key Authentication – When an SSH client attempts to contact the switch, the SSH server uses the host key pair to negotiate a session key and encryption method. Only clients that have a private key corresponding to the public keys stored on the switch can access it. The following exchanges take place during this process:

   Authenticating SSH v1.5 Clients

   a. The client sends its RSA public key to the switch.
   b. The switch compares the client's public key to those stored in memory.
   c. If a match is found, the switch uses its secret key to generate a random 256-bit string as a challenge, encrypts this string with the user's public key, and sends it to the client.
   d. The client uses its private key to decrypt the challenge string, computes the MD5 checksum, and sends the checksum back to the switch.
   e. The switch compares the checksum sent from the client against that computed for the original string it sent. If the two checksums match, this means that the client's private key corresponds to an authorized public key, and the client is authenticated.

   Authenticating SSH v2 Clients

   a. The client first queries the switch to determine if DSA public key authentication using a preferred algorithm is acceptable.
   b. If the specified algorithm is supported by the switch, it notifies the client to proceed with the authentication process. Otherwise, it rejects the request.
   c. The client sends a signature generated using the private key to the switch.

d. When the server receives this message, it checks whether the supplied key is acceptable for authentication, and if so, it then checks whether the signature is correct. If both checks succeed, the client is authenticated.

Note: The SSH server supports up to eight client sessions. The maximum number of client sessions includes both current Telnet sessions and SSH sessions.

Note: The SSH server can be accessed using any configured IPv4 or IPv6 interface address on the switch.

ip ssh authentication-retries

This command configures the number of times the SSH server attempts to reauthenticate a user. Use the **no** form to restore the default setting.

Syntax

ip ssh authentication-retries *count*

no ip ssh authentication-retries

count – The number of authentication attempts permitted after which the interface is reset. (Range: 1-5)

Default Setting

3

Command Mode

Global Configuration

Example

```
Console(config)#ip ssh authentication-retires 2
Console(config)#
```

Related Commands

show ip ssh (241)

ip ssh server

This command enables the Secure Shell (SSH) server on this switch. Use the **no** form to disable this service.

Syntax

[**no**] **ip ssh server**

Default Setting

Disabled

Command Mode
Global Configuration

Command Usage
- The SSH server supports up to eight client sessions. The maximum number of client sessions includes both current Telnet sessions and SSH sessions.
- The SSH server uses DSA or RSA for key exchange when the client first establishes a connection with the switch, and then negotiates with the client to select either DES (56-bit) or 3DES (168-bit) for data encryption.
- You must generate DSA and RSA host keys before enabling the SSH server.

Example
```
Console#ip ssh crypto host-key generate dsa
Console#configure
Console(config)#ip ssh server
Console(config)#
```

Related Commands
ip ssh crypto host-key generate (239)
show ssh (242)

ip ssh server-key size

This command sets the SSH server key size. Use the **no** form to restore the default setting.

Syntax
ip ssh server-key size *key-size*

no ip ssh server-key size

key-size – The size of server key. (Range: 512-896 bits)

Default Setting
768 bits

Command Mode
Global Configuration

Command Usage
The server key is a private key that is never shared outside the switch.
The host key is shared with the SSH client, and is fixed at 1024 bits.

Example
```
Console(config)#ip ssh server-key size 512
Console(config)#
```

ip ssh timeout

This command configures the timeout for the SSH server. Use the **no** form to restore the default setting.

Syntax

ip ssh timeout *seconds*

no ip ssh timeout

seconds – The timeout for client response during SSH negotiation. (Range: 1-120)

Default Setting

120 seconds

Command Mode

Global Configuration

Command Usage

The **timeout** specifies the interval the switch will wait for a response from the client during the SSH negotiation phase. Once an SSH session has been established, the timeout for user input is controlled by the exec-timeout command for vty sessions.

Example

```
Console(config)#ip ssh timeout 60
Console(config)#
```

Related Commands

exec-timeout (115)
show ip ssh (241)

delete public-key

This command deletes the specified user's public key.

Syntax

delete public-key *username* [**dsa** | **rsa**]

username – Name of an SSH user. (Range: 1-8 characters)

dsa – DSA public key type.

rsa – RSA public key type.

Default Setting

Deletes both the DSA and RSA key.

Command Mode

Privileged Exec

Example

```
Console#delete public-key admin dsa
Console#
```

ip ssh crypto host-key generate

This command generates the host key pair (i.e., public and private).

Syntax

ip ssh crypto host-key generate [**dsa** | **rsa**]

dsa – DSA (Version 2) key type.

rsa – RSA (Version 1) key type.

Default Setting

Generates both the DSA and RSA key pairs.

Command Mode

Privileged Exec

Command Usage

- The switch uses only RSA Version 1 for SSHv1.5 clients and DSA Version 2 for SSHv2 clients.
- This command stores the host key pair in memory (i.e., RAM). Use the ip ssh save host-key command to save the host key pair to flash memory.
- Some SSH client programs automatically add the public key to the known hosts file as part of the configuration process. Otherwise, you must manually create a known hosts file and place the host public key in it.
- The SSH server uses this host key to negotiate a session key and encryption method with the client trying to connect to it.

Example

```
Console#ip ssh crypto host-key generate dsa
Console#
```

Related Commands

ip ssh crypto zeroize (240)
ip ssh save host-key (240)

ip ssh crypto zeroize

This command clears the host key from memory (i.e. RAM).

Syntax

ip ssh crypto zeroize [**dsa** | **rsa**]

dsa – DSA key type.

rsa – RSA key type.

Default Setting

Clears both the DSA and RSA key.

Command Mode

Privileged Exec

Command Usage

- This command clears the host key from volatile memory (RAM). Use the **no** ip ssh save host-key command to clear the host key from flash memory.
- The SSH server must be disabled before you can execute this command.

Example

```
Console#ip ssh crypto zeroize dsa
Console#
```

Related Commands

ip ssh crypto host-key generate (239)
ip ssh save host-key (240)
no ip ssh server (236)

ip ssh save host-key

This command saves the host key from RAM to flash memory.

Syntax

ip ssh save host-key

Default Setting

Saves both the DSA and RSA key.

Command Mode

Privileged Exec

Example

```
Console#ip ssh save host-key dsa
Console#
```

Related Commands
ip ssh crypto host-key generate (239)

show ip ssh

This command displays the connection settings used when authenticating client access to the SSH server.

Command Mode
Privileged Exec

Example

```
Console#show ip ssh
SSH Enabled - Version 2.0
Negotiation Timeout : 120 seconds; Authentication Retries : 3
Server Key Size     : 768 bits
Console#
```

show public-key

This command shows the public key for the specified user or for the host.

Syntax

show public-key [**user** [*username*]| **host**]

username – Name of an SSH user. (Range: 1-32 characters)

Default Setting
Shows all public keys.

Command Mode
Privileged Exec

Command Usage
- If no parameters are entered, all keys are displayed. If the user keyword is entered, but no user name is specified, then the public keys for all users are displayed.
- When an RSA key is displayed, the first field indicates the size of the host key (e.g., 1024), the second field is the encoded public exponent (e.g., 35), and the last string is the encoded modulus. When a DSA key is displayed, the first field indicates that the encryption method used by SSH is based on the Digital Signature Standard (DSS), and the last string is the encoded modulus.

Example

```
Console#show public-key host
Host:
RSA:
1024 65537 132369406582547640313827955265363759278355253279726295211302 41
  071942106165575942459093923609695405036277525755625100386613098939383452310
  332802149888661921595568598879891919505883940181387440468908779160305837768
```

```
  185490002831341625008348718449522087429212255691665655296328163516964040831
  5547660664151657116381
DSA:
ssh-dss AAAB3NzaC1kc3MAAACBAPWKZTPbsRIB8ydEXcxM3dyV/yrDbKStIlnzD/Dg0h2Hxc
  YV44sXZ2JXhamLK6P8bvuiyacWbUW/a4PAtp1KMSdqsKeh3hKoA3vRRSy1N2XFfAKxl5fwFfv
  JlPdOkFgzLGMinvSNYQwiQXbKTBH0Z4mUZpE85PWxDZMaCNBPjBrRAAAAFQChb4vsdfQGNIjwbv
  wrNLaQ77isiwAAAIEAsy5YWDC99ebYHNRj5kh47wY4i8cZvH+/p9cnrfwFTMU01VFDly3IR
  2G395NLy5Qd7ZDxfA9mCOfT/yyEfbobMJZi8oGCstSNOxrZZVnMqWrTYfdrKX7YKBw/Kjw6Bm
  iFq7O+jAhf1Dg45loAc27s6TLdtny1wRq/ow2eTCD5nekAAACBAJ8rMccXTxHLFAczWS7EjOy
  DbsloBfPuSAb4oAsyjKXKVYNLQkTLZfcFRu41bS2KV5LAwecsigF/+DjKGWtPNIQqabKgYCw2
  o/dVzX4Gg+yqdTlYmGA7fHGm8ARGeiG4ssFKy4Z6DmYPXFum1Yg0fhLwuHpOSKdxT3kk475S7
  w0W
Console#
```

show ssh

This command displays the current SSH server connections.

Command Mode

Privileged Exec

Example

```
Console#show ssh
Connection Version State                Username Encryption
  1          2.0   Session-Started      admin   ctos aes128-cbc-hmac-md5
                                                 stoc aes128-cbc-hmac-md5
Console#
```

Table 47: show ssh - display description

Field	Description
Connection	The session number. (Range: 1-8)
Version	The Secure Shell version number.
State	The authentication negotiation state. (Values: Negotiation-Started, Authentication-Started, Session-Started)
Username	The user name of the client.

802.1X Port Authentication

The switch supports IEEE 802.1X (dot1x) port-based access control that prevents unauthorized access to the network by requiring users to first submit credentials for authentication. Client authentication is controlled centrally by a RADIUS server using EAP (Extensible Authentication Protocol).

Table 48: 802.1X Port Authentication Commands

Command	Function	Mode
General Commands		
dot1x default	Resets all dot1x parameters to their default values	GC
dot1x system-auth-control	Enables dot1x globally on the switch.	GC
Authenticator Commands		
dot1x intrusion-action	Sets the port response to intrusion when authentication fails	IC
dot1x max-reauth-req	Sets the maximum number of times that the switch sends an EAP-request/identity frame to the client before restarting the authentication process	IC
dot1x max-req	Sets the maximum number of times that the switch retransmits an EAP request/identity packet to the client before it times out the authentication session	IC
dot1x operation-mode	Allows single or multiple hosts on an dot1x port	IC
dot1x port-control	Sets dot1x mode for a port interface	IC
dot1x re-authentication	Enables re-authentication for all ports	IC
dot1x timeout quiet-period	Sets the time that a switch port waits after the Max Request Count has been exceeded before attempting to acquire a new client	IC
dot1x timeout re-authperiod	Sets the time period after which a connected client must be re-authenticated	IC
dot1x timeout supp-timeout	Sets the interval for a supplicant to respond	IC
dot1x timeout tx-period	Sets the time period during an authentication session that the switch waits before re-transmitting an EAP packet	IC
dot1x re-authenticate	Forces re-authentication on specific ports	PE
Supplicant Commands		
dot1x timeout auth-period	Sets the time that a supplicant port waits for a response from the authenticator	IC
dot1x timeout held-period	Sets the time a port waits after the maximum start count has been exceeded before attempting to find another authenticator	IC
Information Display Commands		
show dot1x	Shows all dot1x related information	PE

General Commands

dot1x default

This command sets all configurable dot1x authenticator global and port settings to their default values.

Command Mode

Global Configuration

Command Usage

This command resets the following commands to their default settings:

- dot1x system-auth-control
- dot1x eapol-pass-through
- dot1x port-control
- dot1x port-control multi-host max-count
- dot1x operation-mode
- dot1x max-req
- dot1x timeout quiet-period
- dot1x timeout tx-period
- dot1x timeout re-authperiod
- dot1x timeout sup-timeout
- dot1x re-authentication
- dot1x intrusion-action

Example

```
Console(config)#dot1x default
Console(config)#
```

dot1x system-auth-control

This command enables IEEE 802.1X port authentication globally on the switch. Use the **no** form to restore the default.

Syntax

[**no**] **dot1x system-auth-control**

Default Setting

Disabled

Command Mode

Global Configuration

Example

```
Console(config)#dot1x system-auth-control
Console(config)#
```

Authenticator Commands

dot1x intrusion-action

This command sets the port's response to a failed authentication, either to block all traffic, or to assign all traffic for the port to a guest VLAN. Use the **no** form to reset the default.

Syntax

dot1x intrusion-action {**block-traffic** | **guest-vlan**}

no dot1x intrusion-action

block-traffic - Blocks traffic on this port.

guest-vlan - Assigns the user to the Guest VLAN.

Default

block-traffic

Command Mode

Interface Configuration

Command Usage

- For guest VLAN assignment to be successful, the VLAN must be configured and set as active (see the vlan database command) and assigned as the guest VLAN for the port (see the network-access guest-vlan command).
- A port can only be assigned to the guest VLAN in case of failed authentication, if switchport mode is set to Hybrid.

Example

```
Console(config)#interface eth 1/2
Console(config-if)#dot1x intrusion-action guest-vlan
Console(config-if)#
```

dot1x max-reauth-req

This command sets the maximum number of times that the switch sends an EAP-request/identity frame to the client before restarting the authentication process. Use the **no** form to restore the default.

Syntax

dot1x max-reauth-req *count*

no dot1x max-reauth-req

count – The maximum number of requests (Range: 1-10)

Default

2

Command Mode

Interface Configuration

Example

```
Console(config)#interface eth 1/2
Console(config-if)#dot1x max-reauth-req 2
Console(config-if)#
```

dot1x max-req

This command sets the maximum number of times the switch port will retransmit an EAP request/identity packet to the client before it times out the authentication session. Use the **no** form to restore the default.

Syntax

dot1x max-req *count*

no dot1x max-req

count – The maximum number of requests (Range: 1-10)

Default

2

Command Mode

Interface Configuration

Example

```
Console(config)#interface eth 1/2
Console(config-if)#dot1x max-req 2
Console(config-if)#
```

dot1x operation-mode

This command allows hosts (clients) to connect to an 802.1X-authorized port. Use the **no** form with no keywords to restore the default to single host. Use the **no** form with the **multi-host max-count** keywords to restore the default maximum count.

Syntax

dot1x operation-mode {**single-host** | **multi-host** [**max-count** *count*] | **mac-based-auth**}

no dot1x operation-mode [**multi-host max-count**]

single-host – Allows only a single host to connect to this port.

multi-host – Allows multiple host to connect to this port.

max-count – Keyword for the maximum number of hosts.

count – The maximum number of hosts that can connect to a port. (Range: 1-1024; Default: 5)

mac-based – Allows multiple hosts to connect to this port, with each host needing to be authenticated.

Default

Single-host

Command Mode

Interface Configuration

Command Usage

- The "max-count" parameter specified by this command is only effective if the dot1x mode is set to "auto" by the dot1x port-control command.
- In "multi-host" mode, only one host connected to a port needs to pass authentication for all other hosts to be granted network access. Similarly, a port can become unauthorized for all hosts if one attached host fails re-authentication or sends an EAPOL logoff message.
- In "mac-based-auth" mode, each host connected to a port needs to pass authentication. The number of hosts allowed access to a port operating in this mode is limited only by the available space in the secure address table (i.e., up to 1024 addresses).

Example

```
Console(config)#interface eth 1/2
Console(config-if)#dot1x operation-mode multi-host max-count 10
Console(config-if)#
```

dot1x port-control

This command sets the dot1x mode on a port interface. Use the **no** form to restore the default.

Syntax

dot1x port-control {**auto** | **force-authorized** | **force-unauthorized**}

no dot1x port-control

auto – Requires a dot1x-aware connected client to be authorized by the RADIUS server. Clients that are not dot1x-aware will be denied access.

force-authorized – Configures the port to grant access to all clients, either dot1x-aware or otherwise.

force-unauthorized – Configures the port to deny access to all clients, either dot1x-aware or otherwise.

Default

force-authorized

Command Mode

Interface Configuration

Example

```
Console(config)#interface eth 1/2
Console(config-if)#dot1x port-control auto
Console(config-if)#
```

dot1x re-authentication

This command enables periodic re-authentication for a specified port. Use the **no** form to disable re-authentication.

Syntax

[**no**] **dot1x re-authentication**

Command Mode

Interface Configuration

Command Usage

- The re-authentication process verifies the connected client's user ID and password on the RADIUS server. During re-authentication, the client remains connected the network and the process is handled transparently by the dot1x client software. Only if re-authentication fails is the port blocked.

- The connected client is re-authenticated after the interval specified by the dot1x timeout re-authperiod command. The default is 3600 seconds.

Example

```
Console(config)#interface eth 1/2
Console(config-if)#dot1x re-authentication
Console(config-if)#
```

Related Commands

dot1x timeout re-authperiod (249)

dot1x timeout quiet-period

This command sets the time that a switch port waits after the maximum request count (see page 246) has been exceeded before attempting to acquire a new client. Use the **no** form to reset the default.

Syntax

dot1x timeout quiet-period *seconds*

no dot1x timeout quiet-period

seconds - The number of seconds. (Range: 1-65535)

Default

60 seconds

Command Mode

Interface Configuration

Example

```
Console(config)#interface eth 1/2
Console(config-if)#dot1x timeout quiet-period 350
Console(config-if)#
```

dot1x timeout re-authperiod

This command sets the time period after which a connected client must be re-authenticated. Use the **no** form of this command to reset the default.

Syntax

dot1x timeout re-authperiod *seconds*

no dot1x timeout re-authperiod

seconds - The number of seconds. (Range: 1-65535)

Default

3600 seconds

Command Mode

Interface Configuration

Example

```
Console(config)#interface eth 1/2
Console(config-if)#dot1x timeout re-authperiod 300
Console(config-if)#
```

dot1x timeout supp-timeout

This command sets the time that an interface on the switch waits for a response to an EAP request from a client before re-transmitting an EAP packet. Use the **no** form to reset to the default value.

Syntax

dot1x timeout supp-timeout *seconds*

no dot1x timeout supp-timeout

seconds - The number of seconds. (Range: 1-65535)

Default

30 seconds

Command Mode

Interface Configuration

Command Usage

This command sets the timeout for EAP-request frames other than EAP-request/identity frames. If dot1x authentication is enabled on a port, the switch will initiate authentication when the port link state comes up. It will send an EAP-request/identity frame to the client to request its identity, followed by one or more requests for authentication information. It may also send other EAP-request frames to the client during an active connection as required for reauthentication.

Example

```
Console(config)#interface eth 1/2
Console(config-if)#dot1x timeout supp-timeout 300
Console(config-if)#
```

dot1x timeout tx-period

This command sets the time that an interface on the switch waits during an authentication session before re-transmitting an EAP packet. Use the **no** form to reset to the default value.

Syntax

dot1x timeout tx-period *seconds*

no dot1x timeout tx-period

seconds - The number of seconds. (Range: 1-65535)

Default
30 seconds

Command Mode
Interface Configuration

Example

```
Console(config)#interface eth 1/2
Console(config-if)#dot1x timeout tx-period 300
Console(config-if)#
```

dot1x re-authenticate

This command forces re-authentication on all ports or a specific interface.

Syntax

dot1x re-authenticate [*interface*]

interface

ethernet *unit*/*port*

unit - Unit identifier. (Range: 1)

port - Port number. (Range: 1-52)

Command Mode
Privileged Exec

Command Usage
The re-authentication process verifies the connected client's user ID and password on the RADIUS server. During re-authentication, the client remains connected the network and the process is handled transparently by the dot1x client software. Only if re-authentication fails is the port blocked.

Example

```
Console#dot1x re-authenticate
Console#
```

Supplicant Commands

dot1x timeout auth-period

This command sets the time that a supplicant port waits for a response from the authenticator. Use the **no** form to restore the default setting.

Syntax

dot1x timeout auth-period *seconds*

no dot1x timeout auth-period

seconds - The number of seconds. (Range: 1-65535)

Default

30 seconds

Command Mode

Interface Configuration

Command Usage

This command sets the time that the supplicant waits for a response from the authenticator for packets other than EAPOL-Start.

Example

```
Console(config)#interface eth 1/2
Console(config-if)#dot1x timeout auth-period 60
Console(config-if)#
```

dot1x timeout held-period

This command sets the time that a supplicant port waits before resending its credentials to find a new an authenticator. Use the **no** form to reset the default.

Syntax

dot1x timeout held-period *seconds*

no dot1x timeout held-period

seconds - The number of seconds. (Range: 1-65535)

Default

60 seconds

Command Mode

Interface Configuration

Example

```
Console(config)#interface eth 1/2
Console(config-if)#dot1x timeout held-period 120
Console(config-if)#
```

Information Display Commands

show dot1x

This command shows general port authentication related settings on the switch or a specific interface.

Syntax

show dot1x [**statistics**] [**interface** *interface*]

statistics - Displays dot1x status for each port.

interface

ethernet *unit/port*

unit - Unit identifier. (Range: 1)

port - Port number. (Range: 1-52)

Command Mode

Privileged Exec

Command Usage

This command displays the following information:

- *Global 802.1X Parameters* – Shows whether or not 802.1X port authentication is globally enabled on the switch (page 244).
- *802.1X Port Summary* – Displays the port access control parameters for each interface that has enabled 802.1X, including the following items:
  - Type – Administrative state for port access control (Enabled, Authenticator, or Supplicant).
  - Operation Mode – Allows single or multiple hosts (page 247).
  - Control Mode – Dot1x port control mode (page 248).
  - Authorized – Authorization status (yes or n/a - not authorized).
- *802.1X Port Details* – Displays the port access control parameters for each interface, including the following items:
  - Reauthentication – Periodic re-authentication (page 248).
  - Reauth Period – Time after which a connected client must be re-authenticated (page 249).
  - Quiet Period – Time a port waits after Max Request Count is exceeded before attempting to acquire a new client (page 249).
  - TX Period – Time a port waits during authentication session before re-transmitting EAP packet (page 250).
  - Supplicant Timeout – Supplicant timeout.
  - Server Timeout – Server timeout. A RADIUS server must be set before the correct operational value of 10 seconds will be displayed in this field.
  - Reauth Max Retries – Maximum number of reauthentication attempts.
  - Max Request – Maximum number of times a port will retransmit an EAP request/identity packet to the client before it times out the authentication session (page 246).

- Operation Mode– Shows if single or multiple hosts (clients) can connect to an 802.1X-authorized port.
- Port Control–Shows the dot1x mode on a port as auto, force-authorized, or force-unauthorized (page 248).
- Intrusion Action– Shows the port response to intrusion when authentication fails (page 245).
- Supplicant– MAC address of authorized client.

◆ *Authenticator PAE State Machine*

- State – Current state (including initialize, disconnected, connecting, authenticating, authenticated, aborting, held, force_authorized, force_unauthorized).
- Reauth Count– Number of times connecting state is re-entered.
- Current Identifier– The integer (0-255) used by the Authenticator to identify the current authentication session.

◆ *Backend State Machine*

- State – Current state (including request, response, success, fail, timeout, idle, initialize).
- Request Count– Number of EAP Request packets sent to the Supplicant without receiving a response.
- Identifier (Server)– Identifier carried in the most recent EAP Success, Failure or Request packet received from the Authentication Server.

◆ *Reauthentication State Machine*

State – Current state (including initialize, reauthenticate).

Example

```
Console#show dot1x
Global 802.1X Parameters
 System Auth Control       : Enabled

Authenticator Parameters:
 EAPOL Pass Through        : Disabled

802.1X Port Summary

Port     Type          Operation Mode Control Mode       Authorized
-------- ------------- -------------- ------------------ ----------
Eth 1/ 1 Disabled      Single-Host    Force-Authorized   Yes
Eth 1/ 2 Disabled      Single-Host    Force-Authorized   Yes
,,,
Eth 1/53 Disabled      Single-Host    Force-Authorized   Yes
Eth 1/54 Enabled       Single-Host    Auto               Yes

Console#show dot1x interface ethernet 1/2

802.1X Authenticator is enabled on port 2
 Reauthentication     : Enabled
 Reauth Period        : 3600
 Quiet Period         : 60
 TX Period            : 30
 Supplicant Timeout   : 30
 Server Timeout       : 10
```

```
 Reauth Max Retries    : 2
 Max Request           : 2
 Operation Mode        : Multi-host
 Port Control          : Auto
 Intrusion Action      : Block traffic

Supplicant            : 00-e0-29-94-34-65

 Authenticator PAE State Machine
  State                : Authenticated
  Reauth Count         : 0
  Current Identifier   : 3

 Backend State Machine
  State                : Idle
  Request Count        : 0
  Identifier(Server)   : 2

 Reauthentication State Machine
  State                : Initialize
Console#
```

Management IP Filter

This section describes commands used to configure IP management access to the switch.

Table 49: Management IP Filter Commands

Command	Function	Mode
management	Configures IP addresses that are allowed management access	GC
show management	Displays the switch to be monitored or configured from a browser	PE

management

This command specifies the client IP addresses that are allowed management access to the switch through various protocols. A list of up to 15 IP addresses or IP address groups can be specified. Use the **no** form to restore the default setting.

Syntax

[**no**] **management** {**all-client** | **http-client** | **snmp-client** | **telnet-client**} *start-address* [*end-address*]

all-client - Adds IP address(es) to all groups.

http-client - Adds IP address(es) to the web group.

snmp-client - Adds IP address(es) to the SNMP group.

telnet-client - Adds IP address(es) to the Telnet group.

start-address - A single IP address, or the starting address of a range.

end-address - The end address of a range.

Default Setting
All addresses

Command Mode
Global Configuration

Command Usage
- The management interfaces are open to all IP addresses by default. Once you add an entry to a filter list, access to that interface is restricted to the specified addresses.
- If anyone tries to access a management interface on the switch from an invalid address, the switch will reject the connection, enter an event message in the system log, and send a trap message to the trap manager.
- IP address can be configured for SNMP, web, and Telnet access respectively. Each of these groups can include up to five different sets of addresses, either individual addresses or address ranges.
- When entering addresses for the same group (i.e., SNMP, web, or Telnet), the switch will not accept overlapping address ranges. When entering addresses for different groups, the switch will accept overlapping address ranges.
- You cannot delete an individual address from a specified range. You must delete the entire range, and re-enter the addresses.
- You can delete an address range just by specifying the start address, or by specifying both the start address and end address.

Example
This example restricts management access to the indicated addresses.

```
Console(config)#management all-client 192.168.1.19
Console(config)#management all-client 192.168.1.25 192.168.1.30
Console#
```

show management

This command displays the client IP addresses that are allowed management access to the switch through various protocols.

Syntax

show management {**all-client** | **http-client** | **snmp-client** | **telnet-client**}

all-client - Displays IP addresses for all groups.

http-client - Displays IP addresses for the web group.

snmp-client - Displays IP addresses for the SNMP group.

telnet-client - Displays IP addresses for the Telnet group.

Command Mode

Privileged Exec

Example

```
Console#show management all-client
Management Ip Filter
 HTTP-Client:
   Start IP address      End IP address
-----------------------------------------------
1. 192.168.1.19          192.168.1.19
2. 192.168.1.25          192.168.1.30

 SNMP-Client:
   Start IP address      End IP address
-----------------------------------------------
1. 192.168.1.19          192.168.1.19
2. 192.168.1.25          192.168.1.30

 TELNET-Client:
   Start IP address      End IP address
-----------------------------------------------
1. 192.168.1.19          192.168.1.19
2. 192.168.1.25          192.168.1.30

Console#
```

9 General Security Measures

This switch supports many methods of segregating traffic for clients attached to each of the data ports, and for ensuring that only authorized clients gain access to the network. Port-based authentication using IEEE 802.1X is commonly used for these purposes. In addition to these method, several other options of providing client security are described in this chapter. These include port-based authentication, which can be configured to allow network client access by specifying a fixed set of MAC addresses. The addresses assigned to DHCP clients can also be carefully controlled with IP Source Guard and DHCP Snooping commands.

Table 50: General Security Commands

Command Group	Function
Port Security*	Configures secure addresses for a port
802.1X Port Authentication*	Configures host authentication on specific ports using 802.1X
Network Access*	Configures MAC authentication and dynamic VLAN assignment
Web Authentication*	Configures Web authentication
Access Control Lists*	Provides filtering for IP frames (based on address, protocol, TCP/UDP port number or TCP control code) or non-IP frames (based on MAC address or Ethernet type)
DHCPv4 Snooping*	Filters untrusted DHCPv4 messages on unsecure ports by building and maintaining a DHCPv4 snooping binding table
IPv4 Source Guard*	Filters IP traffic on insecure ports for which the source address cannot be identified via DHCP snooping nor static source bindings
ARP Inspection	Validates the MAC-to-IP address bindings in ARP packets
DoS Protection	Protects against Denial-of-Service attacks
Port-based Traffic Segmentation	Configures traffic segmentation for different client sessions based on specified downlink and uplink ports

* The priority of execution for these filtering commands is Port Security, Port Authentication, Network Access, Web Authentication, Access Control Lists, DHCP Snooping, and then IPv4 Source Guard.

Port Security

These commands can be used to enable port security on a port.

When MAC address learning is disabled on an interface, only incoming traffic with source addresses already stored in the dynamic or static address table for this port will be authorized to access the network.

When using port security, the switch stops learning new MAC addresses on the specified port when it has reached a configured maximum number. Only incoming traffic with source addresses already stored in the dynamic or static address table for this port will be authorized to access the network. The port will drop any incoming frames with a source MAC address that is unknown or has been previously learned from another port. If a device with an unauthorized MAC address attempts to use the switch port, the intrusion will be detected and the switch can automatically take action by disabling the port and sending a trap message.

Table 51: Management IP Filter Commands

Command	Function	Mode
mac-address-table static	Maps a static address to a port in a VLAN	GC
mac-learning	Enables MAC address learning on the selected physical interface or VLAN	IC
port security	Configures a secure port	IC
show mac-address-table	Displays entries in the bridge-forwarding database	PE
show port security	Displays port security status and secure address count	PE

mac-learning

This command enables MAC address learning on the selected interface. Use the **no** form to disable MAC address learning.

Syntax

[**no**] **mac-learning**

Default Setting

Enabled

Command Mode

Interface Configuration (Ethernet or Port Channel)

Command Usage

- The **no mac-learning** command immediately stops the switch from learning new MAC addresses on the specified port or trunk. Incoming traffic with source addresses not stored in the static address table, will be flooded. However, if a security function such as 802.1X or DHCP snooping is enabled and mac-learning is disabled, then only incoming traffic with source addresses stored in

the static address table will be accepted, all other packets are dropped. Note that the dynamic addresses stored in the address table when MAC address learning is disabled are flushed from the system, and no dynamic addresses are subsequently learned until MAC address learning has been re-enabled.

- The mac-learning commands cannot be used if 802.1X Port Authentication has been globally enabled on the switch with the dot1x system-auth-control command, or if MAC Address Security has been enabled by the port security command on the same interface.

Example

The following example disables MAC address learning for port 2.

```
Console(config)#interface ethernet 1/2
Console(config-if)#no mac-learning
Console(config-if)#
```

Related Commands

show interfaces status (364)

port security

This command enables or configures port security. Use the **no** form without any keywords to disable port security. Use the **no** form with the appropriate keyword to restore the default settings for a response to security violation or for the maximum number of allowed addresses.

Syntax

port security [**action** {**shutdown** | **trap** | **trap-and-shutdown**} | **max-mac-count** *address-count*]

no port security [**action** | **max-mac-count**]

action - Response to take when port security is violated.

shutdown - Disable port only.

trap - Issue SNMP trap message only.

trap-and-shutdown - Issue SNMP trap message and disable port.

max-mac-count

address-count - The maximum number of MAC addresses that can be learned on a port. (Range: 0 - 1024, where 0 means disabled)

Default Setting

Status: Disabled
Action: None
Maximum Addresses: 0

Command Mode

Interface Configuration (Ethernet)

Command Usage

- The default maximum number of MAC addresses allowed on a secure port is zero (that is, port security is disabled). To use port security, you must configure the maximum number of addresses allowed on a port using the **port security max-mac-count** command.

- When port security is enabled using the **port security** command, or the maximum number or allowed addresses is set to a value lower than the current limit after port security has been enabled, the switch first clears all dynamically learned entries from the address table. It then starts learning new MAC addresses on the specified port, and stops learning addresses when it reaches a configured maximum number. Only incoming traffic with source addresses already stored in the dynamic or static address table will be accepted.

- To configure the maximum number of address entries which can be learned on a port, specify the maximum number of dynamic addresses allowed. The switch will learn up to the maximum number of allowed address pairs <source MAC address, VLAN> for frames received on the port. (The specified maximum address count is effective when port security is enabled or disabled.) Note that you can manually add additional secure addresses to a port using the mac-address-table static command. When the port has reached the maximum number of MAC addresses, the port will stop learning new addresses. The MAC addresses already in the address table will be retained and will not be aged out.

- If port security is enabled, and the maximum number of allowed addresses are set to a non-zero value, any device not in the address table that attempts to use the port will be prevented from accessing the switch.

- If a port is disabled due to a security violation, it must be manually re-enabled using the no shutdown command.

- A secure port has the following restrictions:
  - Cannot be connected to a network interconnection device.
  - Cannot be a trunk port.
  - RSPAN and port security are mutually exclusive functions. If port security is enabled on a port, that port cannot be set as an RSPAN uplink port. Also, when a port is configured as an RSPAN uplink port, source port, or destination port, port security cannot be enabled on that port.

Example

The following example enables port security for port 5, and sets the response to a security violation to issue a trap message:

```
Console(config)#interface ethernet 1/5
Console(config-if)#port security action trap
```

Related Commands

show interfaces status (364)
shutdown (356)
mac-address-table static (414)

show port security

This command displays port security status and the secure address count.

Syntax

show port security [**interface** *interface*]

interface - Specifies a port interface.

ethernet *unit/port*

unit - Unit identifier. (Range: 1)

port - Port number. (Range: 1-52)

Command Mode

Privileged Exec

Example

This example shows the port security settings and number of secure addresses for all ports.

```
Console#show port security
Global Port Security Parameters
 Secure MAC Aging Mode : Disabled

Port Security Port Summary
 Port     Port Security Port Status  Intrusion Action  MaxMacCnt CurrMacCnt
 ---------------------------------------------------------------------------
 Eth 1/ 1 Disabled      Secure/Down  None              0         2
 Eth 1/ 2 Enabled       Secure/Up    None              10        0
 Eth 1/ 3 Disabled      Secure/Down  None              0         0
 Eth 1/ 4 Disabled      Secure/Down  None              0         0
 Eth 1/ 5 Disabled      Secure/Down  None              0         0
 .
 .
 .
```

Table 52: show port security - display description

Field	Description
Port Security	The configured status (enabled or disabled).
Port Status	The operational status: ◆ Secure/Down – Port security is disabled. ◆ Secure/Up – Port security is enabled. ◆ Shutdown – Port is shut down due to a response to a port security violation.
Intrusion Action	The configured intrusion response.

Table 52: show port security - display description (Continued)

Field	Description
MaxMacCnt	The maximum number of addresses which can be stored in the address table for this interface (either dynamic or static).
CurrMacCnt	The current number of secure entries in the address table.

The following example shows the port security settings and number of secure addresses for a specific port. The Last Intrusion MAC and Last Time Detected Intrusion MAC fields show information about the last detected intrusion MAC address. These fields are not applicable if no intrusion has been detected or port security is disabled. The MAC Filter ID field is configured by the network-access mac-filter command. If this field displays Disabled, then any unknown source MAC address can be learned as a secure MAC address. If it displays a filter identifier, then only source MAC address entries in MAC Filter table can be learned as secure MAC addresses.

```
Console#show port security interface ethernet 1/2
Global Port Security Parameters
 Secure MAC Aging Mode : Disabled

Port Security Details
 Port                                  : 1/2
 Port Security                         : Enabled
 Port Status                           : Secure/Up
 Intrusion Action                      : None
 Max MAC Count                         : 0
 Current MAC Count                     : 0
 MAC Filter                            : Disabled
 Last Intrusion MAC                    : NA
 Last Time Detected Intrusion MAC      : NA
Console#
```

This example shows information about a detected intrusion.

```
Console#show port security interface ethernet 1/2
Global Port Security Parameters
 Secure MAC Aging Mode : Disabled

Port Security Details
 Port                                  : 1/2
 Port Security                         : Enabled
 Port Status                           : Secure/Up
 Intrusion Action                      : None
 Max MAC Count                         : 0
 Current MAC Count                     : 0
 MAC Filter                            : Disabled
 Last Intrusion MAC                    : 00-10-22-00-00-01
 Last Time Detected Intrusion MAC      : 2015/7/29 15:13:03
Console#
```

Network Access (MAC Address Authentication)

Network Access authentication controls access to the network by authenticating the MAC address of each host that attempts to connect to a switch port. Traffic received from a specific MAC address is forwarded by the switch only if the source MAC address is successfully authenticated by a central RADIUS server. While authentication for a MAC address is in progress, all traffic is blocked until authentication is completed. Once successfully authenticated, the RADIUS server may optionally assign VLAN and QoS settings for the switch port.

Table 53: Network Access Commands

Command	Function	Mode
network-access aging	Enables MAC address aging	GC
network-access mac-filter	Adds a MAC address to a filter table	GC
mac-authentication reauth-time	Sets the time period after which a connected MAC address must be re-authenticated	GC
network-access dynamic-qos	Enables the dynamic quality of service feature	IC
network-access dynamic-vlan	Enables dynamic VLAN assignment from a RADIUS server	IC
network-access guest-vlan	Specifies the guest VLAN	IC
network-access max-mac-count	Sets the maximum number of MAC addresses that can be authenticated on a port via all forms of authentication	IC
network-access mode mac-authentication	Enables MAC authentication on an interface	IC
network-access port-mac-filter	Enables the specified MAC address filter	IC
mac-authentication intrusion-action	Determines the port response when a connected host fails MAC authentication.	IC
mac-authentication max-mac-count	Sets the maximum number of MAC addresses that can be authenticated on a port via MAC authentication	IC
clear network-access	Clears authenticated MAC addresses from the address table	PE
show network-access	Displays the MAC authentication settings for port interfaces	PE
show network-access mac-address-table	Displays information for entries in the secure MAC address table	PE
show network-access mac-filter	Displays information for entries in the MAC filter tables	PE

network-access aging

Use this command to enable aging for authenticated MAC addresses stored in the secure MAC address table. Use the **no** form of this command to disable address aging.

Syntax

[**no**] **network-access aging**

Default Setting
Disabled

Command Mode
Global Configuration

Command Usage
- Authenticated MAC addresses are stored as dynamic entries in the switch's secure MAC address table and are removed when the aging time expires. The address aging time is determined by the mac-address-table aging-time command.
- This parameter applies to authenticated MAC addresses configured by the MAC Address Authentication process described in this section, as well as to any secure MAC addresses authenticated by 802.1X, regardless of the 802.1X Operation Mode (Single-Host, Multi-Host, or MAC-Based authentication as described on page 247).
- The maximum number of secure MAC addresses supported for the switch system is 1024.

Example

```
Console(config)#network-access aging
Console(config)#
```

network-access mac-filter

Use this command to add a MAC address into a filter table. Use the **no** form of this command to remove the specified MAC address.

Syntax

[**no**] **network-access mac-filter** *filter-id*
mac-address *mac-address* [**mask** *mask-address*]

filter-id - Specifies a MAC address filter table. (Range: 1-64)

mac-address - Specifies a MAC address entry. (Format: xx-xx-xx-xx-xx-xx)

mask - Specifies a MAC address bit mask for a range of addresses.

Default Setting
Disabled

Command Mode
Global Configuration

Command Usage
- Specified addresses are exempt from network access authentication.

- This command is different from configuring static addresses with the mac-address-table static command in that it allows you configure a range of addresses when using a mask, and then to assign these addresses to one or more ports with the network-access mac-filter command.
- Up to 64 filter tables can be defined.
- There is no limitation on the number of entries that can entered in a filter table.

Example

```
Console(config)#network-access mac-filter 1 mac-address 11-22-33-44-55-66
Console(config)#
```

mac-authentication reauth-time

Use this command to set the time period after which a connected MAC address must be re-authenticated. Use the **no** form of this command to restore the default value.

Syntax

mac-authentication reauth-time *seconds*

no mac-authentication reauth-time

seconds - The reauthentication time period. (Range: 120-1000000 seconds)

Default Setting

1800

Command Mode

Global Configuration

Command Usage

- The reauthentication time is a global setting and applies to all ports.
- When the reauthentication time expires for a secure MAC address it is reauthenticated with the RADIUS server. During the reauthentication process traffic through the port remains unaffected.

Example

```
Console(config)#mac-authentication reauth-time 300
Console(config)#
```

network-access dynamic-qos

Use this command to enable the dynamic QoS feature for an authenticated port. Use the **no** form to restore the default.

Syntax

[**no**] **network-access dynamic-qos**

Default Setting

Disabled

Command Mode

Interface Configuration

Command Usage

- The RADIUS server may optionally return dynamic QoS assignments to be applied to a switch port for an authenticated user. The "Filter-ID" attribute (attribute 11) can be configured on the RADIUS server to pass the following QoS information:

Table 54: Dynamic QoS Profiles

Profile	Attribute Syntax	Example
DiffServ	**service-policy-in**=*policy-map-name*	service-policy-in=p1
Rate Limit	**rate-limit-input**=*rate (Kbps)*	rate-limit-input=100 (Kbps)
	rate-limit-output=*rate (Kbps)*	rate-limit-output=200 (Kbps)
802.1p	**switchport-priority-default**=*value*	switchport-priority-default=2
IP ACL	**ip-access-group-in**=*ip-acl-name*	ip-access-group-in=ipv4acl
IPv6 ACL	**ipv6-access-group-in**=*ipv6-acl-name*	ipv6-access-group-in=ipv6acl
MAC ACL	**mac-access-group-in**=*mac-acl-name*	mac-access-group-in=macAcl

- When the last user logs off of a port with a dynamic QoS assignment, the switch restores the original QoS configuration for the port.
- When a user attempts to log into the network with a returned dynamic QoS profile that is different from users already logged on to the same port, the user is denied access.
- While a port has an assigned dynamic QoS profile, any manual QoS configuration changes only take effect after all users have logged off of the port.

Note: Any configuration changes for dynamic QoS are not saved to the switch configuration file.

Example

The following example enables the dynamic QoS feature on port 1.

```
Console(config)#interface ethernet 1/1
Console(config-if)#network-access dynamic-qos
Console(config-if)#
```

network-access dynamic-vlan

Use this command to enable dynamic VLAN assignment for an authenticated port. Use the **no** form to disable dynamic VLAN assignment.

Syntax

[**no**] **network-access dynamic-vlan**

Default Setting

Enabled

Command Mode

Interface Configuration

Command Usage

- When enabled, the VLAN identifiers returned by the RADIUS server through the 802.1X authentication process will be applied to the port, providing the VLANs have already been created on the switch.
- The VLAN settings specified by the first authenticated MAC address are implemented for a port. Other authenticated MAC addresses on the port must have same VLAN configuration, or they are treated as an authentication failure.
- If dynamic VLAN assignment is enabled on a port and the RADIUS server returns no VLAN configuration, the authentication is still treated as a success, and the host assigned to the default untagged VLAN.
- When the dynamic VLAN assignment status is changed on a port, all authenticated addresses are cleared from the secure MAC address table.

Example

The following example enables dynamic VLAN assignment on port 1.

```
Console(config)#interface ethernet 1/1
Console(config-if)#network-access dynamic-vlan
Console(config-if)#
```

network-access guest-vlan

Use this command to assign all traffic on a port to a guest VLAN when 802.1x authentication or MAC authentication is rejected. Use the **no** form of this command to disable guest VLAN assignment.

Syntax

network-access guest-vlan *vlan-id*

no network-access guest-vlan

vlan-id - VLAN ID (Range: 1-4094)

Default Setting

Disabled

Command Mode

Interface Configuration

Command Usage

- The VLAN to be used as the guest VLAN must be defined and set as active (See the vlan database command).
- When used with 802.1X authentication, the intrusion-action must be set for "guest-vlan" to be effective (see the dot1x intrusion-action command).
- A port can only be assigned to the guest VLAN in case of failed authentication, if switchport mode is set to Hybrid.

Example

```
Console(config)#interface ethernet 1/1
Console(config-if)#network-access guest-vlan 25
Console(config-if)#
```

network-access max-mac-count

Use this command to set the maximum number of MAC addresses that can be authenticated on a port interface via all forms of authentication. Use the **no** form of this command to restore the default.

Syntax

network-access max-mac-count *count*

no network-access max-mac-count

count - The maximum number of authenticated IEEE 802.1X and MAC addresses allowed. (Range: 0-1024; 0 for unlimited)

Default Setting

1024

Command Mode
Interface Configuration

Command Usage
The maximum number of MAC addresses per port is 1024, and the maximum number of secure MAC addresses supported for the switch system is 1024. When the limit is reached, all new MAC addresses are treated as authentication failures.

Example

```
Console(config-if)#network-access max-mac-count 5
Console(config-if)#
```

network-access mode mac-authentication

Use this command to enable network access authentication on a port. Use the **no** form of this command to disable network access authentication.

Syntax

[**no**] **network-access mode mac-authentication**

Default Setting
Disabled

Command Mode
Interface Configuration

Command Usage
- When enabled on a port, the authentication process sends a Password Authentication Protocol (PAP) request to a configured RADIUS server. The user name and password are both equal to the MAC address being authenticated.
- On the RADIUS server, PAP user name and passwords must be configured in the MAC address format XX-XX-XX-XX-XX-XX (all in upper case).
- Authenticated MAC addresses are stored as dynamic entries in the switch secure MAC address table and are removed when the aging time expires. The maximum number of secure MAC addresses supported for the switch system is 1024.
- Configured static MAC addresses are added to the secure address table when seen on a switch port. Static addresses are treated as authenticated without sending a request to a RADIUS server.
- MAC authentication, 802.1X, and port security cannot be configured together on the same port. Only one security mechanism can be applied.
- MAC authentication cannot be configured on trunks (i.e., static nor dynamic).

- When port status changes to down, all MAC addresses are cleared from the secure MAC address table. Static VLAN assignments are not restored.

- The RADIUS server may optionally return a VLAN identifier list. VLAN identifier list is carried in the "Tunnel-Private-Group-ID" attribute. The VLAN list can contain multiple VLAN identifiers in the format "1u,2t," where "u" indicates untagged VLAN and "t" tagged VLAN. The "Tunnel-Type" attribute should be set to "VLAN," and the "Tunnel-Medium-Type" attribute set to "802."

Example

```
Console(config-if)#network-access mode mac-authentication
Console(config-if)#
```

network-access port-mac-filter

Use this command to enable the specified MAC address filter. Use the **no** form of this command to disable the specified MAC address filter.

Syntax

network-access port-mac-filter *filter-id*

no network-access port-mac-filter

filter-id - Specifies a MAC address filter table. (Range: 1-64)

Default Setting

None

Command Mode

Interface Configuration

Command Mode

- Entries in the MAC address filter table can be configured with the network-access mac-filter command.

- Only one filter table can be assigned to a port.

Example

```
Console(config)#interface ethernet 1/1
Console(config-if)#network-access port-mac-filter 1
Console(config-if)#
```

mac-authentication intrusion-action

Use this command to configure the port response to a host MAC authentication failure. Use the **no** form of this command to restore the default.

Syntax

mac-authentication intrusion-action {**block traffic** | **pass traffic**}

no mac-authentication intrusion-action

Default Setting

Block Traffic

Command Mode

Interface Configuration

Example

```
Console(config-if)#mac-authentication intrusion-action block-traffic
Console(config-if)#
```

mac-authentication max-mac-count

Use this command to set the maximum number of MAC addresses that can be authenticated on a port via MAC authentication. Use the **no** form of this command to restore the default.

Syntax

mac-authentication max-mac-count *count*

no mac-authentication max-mac-count

count - The maximum number of MAC-authenticated MAC addresses allowed. (Range: 1-1024)

Default Setting

1024

Command Mode

Interface Configuration

Example

```
Console(config-if)#mac-authentication max-mac-count 32
Console(config-if)#
```

clear network-access

Use this command to clear entries from the secure MAC addresses table.

Syntax

clear network-access mac-address-table [**static** | **dynamic**] [**address** *mac-address*] [**interface** *interface*]

static - Specifies static address entries.

dynamic - Specifies dynamic address entries.

mac-address - Specifies a MAC address entry. (Format: xx-xx-xx-xx-xx-xx)

interface - Specifies a port interface.

ethernet *unit/port*

unit - Unit identifier. (Range: 1)

port - Port number. (Range: 1-52)

Default Setting

None

Command Mode

Privileged Exec

Example

```
Console#clear network-access mac-address-table interface ethernet 1/1
Console#
```

show network-access

Use this command to display the MAC authentication settings for port interfaces.

Syntax

show network-access [**interface** *interface*]

interface - Specifies a port interface.

ethernet *unit/port*

unit - Unit identifier. (Range: 1)

port - Port number. (Range: 1-52)

Default Setting

Displays the settings for all interfaces.

Command Mode

Privileged Exec

Example

```
Console#show network-access interface ethernet 1/1
Global secure port information
Reauthentication Time                 : 1800
MAC Address Aging                     : Disabled

Port : 1/1
MAC Authentication                    : Disabled
MAC Authentication Intrusion Action   : Block traffic
MAC Authentication Maximum MAC Counts : 1024
Maximum MAC Counts                    : 1024
Dynamic VLAN Assignment               : Enabled
Dynamic QoS Assignment                : Disabled
MAC Filter ID                         : Disabled
Guest VLAN                            : Disabled
Console#
```

show network-access mac-address-table

Use this command to display secure MAC address table entries.

Syntax

show network-access mac-address-table [**static** | **dynamic**] [**address** *mac-address* [*mask*]] [**interface** *interface*] [**sort** {**address** | **interface**}]

static - Specifies static address entries.

dynamic - Specifies dynamic address entries.

mac-address - Specifies a MAC address entry.
(Format: xx-xx-xx-xx-xx-xx)

mask - Specifies a MAC address bit mask for filtering displayed addresses.

interface - Specifies a port interface.

ethernet *unit*/*port*

unit - Unit identifier. (Range: 1)

port - Port number. (Range: 1-52)

sort - Sorts displayed entries by either MAC address or interface.

Default Setting

Displays all filters.

Command Mode

Privileged Exec

Command Usage

When using a bit mask to filter displayed MAC addresses, a 1 means “care” and a 0 means “don't care”. For example, a MAC of 00-00-01-02-03-04 and mask FF-FF-FF-00-00-00 would result in all MACs in the range 00-00-01-00-00-00 to 00-00-01-FF-FF-FF to be displayed. All other MACs would be filtered out.

Example

```
Console#show network-access mac-address-table
Interface MAC Address       RADIUS Server   Time                      Attribute
--------- ----------------- --------------- ------------------------- ---------
1/1       00-00-01-02-03-04 172.155.120.17  00d06h32m50s              Static
1/1       00-00-01-02-03-05 172.155.120.17  00d06h33m20s              Dynamic
1/1       00-00-01-02-03-06 172.155.120.17  00d06h35m10s              Static
1/3       00-00-01-02-03-07 172.155.120.17  00d06h34m20s              Dynamic

Console#
```

show network-access mac-filter

Use this command to display information for entries in the MAC filter tables.

Syntax

show network-access mac-filter [*filter-id*]

filter-id - Specifies a MAC address filter table. (Range: 1-64)

Default Setting

Displays all filters.

Command Mode

Privileged Exec

Example

```
Console#show network-access mac-filter
Filter ID MAC Address       MAC Mask
--------- ----------------- -----------------
        1 00-00-01-02-03-08 FF-FF-FF-FF-FF-FF
Console#
```

Web Authentication

Web authentication allows stations to authenticate and access the network in situations where 802.1X or Network Access authentication are infeasible or impractical. The web authentication feature allows unauthenticated hosts to request and receive a DHCP assigned IP address and perform DNS queries. All other traffic, except for HTTP protocol traffic, is blocked. The switch intercepts HTTP protocol traffic and redirects it to a switch-generated web page that facilitates user name and password authentication via RADIUS. Once authentication is successful, the web browser is forwarded on to the originally requested web page. Successful authentication is valid for all hosts connected to the port.

Note: RADIUS authentication must be activated and configured for the web authentication feature to work properly (see "Authentication Sequence" on page 204).

Note: Web authentication cannot be configured on trunk ports.

Table 55: Web Authentication

Command	Function	Mode
web-auth login-attempts	Defines the limit for failed web authentication login attempts	GC
web-auth quiet-period	Defines the amount of time to wait after the limit for failed login attempts is exceeded.	GC
web-auth session-timeout	Defines the amount of time a session remains valid	GC
web-auth system-auth-control	Enables web authentication globally for the switch	GC
web-auth	Enables web authentication for an interface	IC
web-auth re-authenticate (Port)	Ends all web authentication sessions on the port and forces the users to re-authenticate	PE
web-auth re-authenticate (IP)	Ends the web authentication session associated with the designated IP address and forces the user to re-authenticate	PE
show web-auth	Displays global web authentication parameters	PE
show web-auth interface	Displays interface-specific web authentication parameters and statistics	PE
show web-auth summary	Displays a summary of web authentication port parameters and statistics	PE

web-auth login-attempts

This command defines the limit for failed web authentication login attempts. After the limit is reached, the switch refuses further login attempts until the quiet time expires. Use the **no** form to restore the default.

Syntax

web-auth login-attempts *count*

no web-auth login-attempts

count - The limit of allowed failed login attempts. (Range: 1-3)

Default Setting

3 login attempts

Command Mode

Global Configuration

Example

```
Console(config)#web-auth login-attempts 2
Console(config)#
```

web-auth quiet-period

This command defines the amount of time a host must wait after exceeding the limit for failed login attempts, before it may attempt web authentication again. Use the **no** form to restore the default.

Syntax

web-auth quiet-period *time*

no web-auth quiet period

time - The amount of time the host must wait before attempting authentication again. (Range: 1-180 seconds)

Default Setting

60 seconds

Command Mode

Global Configuration

Example

```
Console(config)#web-auth quiet-period 120
Console(config)#
```

web-auth session-timeout

This command defines the amount of time a web-authentication session remains valid. When the session timeout has been reached, the host is logged off and must re-authenticate itself the next time data transmission takes place. Use the **no** form to restore the default.

Syntax

web-auth session-timeout *timeout*

no web-auth session timeout

timeout - The amount of time that an authenticated session remains valid. (Range: 300-3600 seconds)

Default Setting

3600 seconds

Command Mode

Global Configuration

Example

```
Console(config)#web-auth session-timeout 1800
Console(config)#
```

web-auth system-auth-control

This command globally enables web authentication for the switch. Use the **no** form to restore the default.

Syntax

[**no**] **web-auth system-auth-control**

Default Setting

Disabled

Command Mode

Global Configuration

Command Usage

Both **web-auth system-auth-control** for the switch and web-auth for an interface must be enabled for the web authentication feature to be active.

Example

```
Console(config)#web-auth system-auth-control
Console(config)#
```

web-auth

This command enables web authentication for an interface. Use the no form to restore the default.

Syntax

[**no**] **web-auth**

Default Setting

Disabled

Command Mode

Interface Configuration

Command Usage

Both web-auth system-auth-control for the switch and **web-auth** for a port must be enabled for the web authentication feature to be active.

Example

```
Console(config-if)#web-auth
Console(config-if)#
```

web-auth re-authenticate (Port)

This command ends all web authentication sessions connected to the port and forces the users to re-authenticate.

Syntax

web-auth re-authenticate interface *interface*

interface - Specifies a port interface.

ethernet *unit/port*

unit - Unit identifier. (Range: 1)

port - Port number. (Range: 1-52)

Default Setting

None

Command Mode

Privileged Exec

Example

```
Console#web-auth re-authenticate interface ethernet 1/2
Console#
```

web-auth re-authenticate (IP)

This command ends the web authentication session associated with the designated IP address and forces the user to re-authenticate.

Syntax

web-auth re-authenticate interface *interface ip*

interface - Specifies a port interface.

ethernet *unit/port*

unit - Unit identifier. (Range: 1)

port - Port number. (Range: 1-52)

ip - IPv4 formatted IP address

Default Setting

None

Command Mode

Privileged Exec

Example

```
Console#web-auth re-authenticate interface ethernet 1/2 192.168.1.5
Console#
```

show web-auth

This command displays global web authentication parameters.

Command Mode

Privileged Exec

Example

```
Console#show web-auth
Global Web-Auth Parameters
  System Auth Control      : Enabled
  Session Timeout          : 3600
  Quiet Period             : 60
  Max Login Attempts       : 3
Console#
```

show web-auth interface

This command displays interface-specific web authentication parameters and statistics.

Syntax

show web-auth interface *interface*

interface - Specifies a port interface.

ethernet *unit/port*

unit - Unit identifier. (Range: 1)

port - Port number. (Range: 1-52)

Command Mode

Privileged Exec

Example

```
Console#show web-auth interface ethernet 1/2
Web Auth Status      : Enabled

Host Summary

IP address      Web-Auth-State Remaining-Session-Time
--------------- -------------- ----------------------
1.1.1.1         Authenticated  295
1.1.1.2         Authenticated  111
Console#
```

show web-auth summary

This command displays a summary of web authentication port parameters and statistics.

Command Mode

Privileged Exec

Example

```
Console#show web-auth summary
Global Web-Auth Parameters
  System Auth Control      : Enabled
Port       Status         Authenticated Host Count
----       ------         ------------------------
1/ 1       Disabled       0
1/ 2       Enabled        8
1/ 3       Disabled       0
1/ 4       Disabled       0
1/ 5       Disabled       0
⋮
```

DHCPv4 Snooping

DHCPv4 snooping allows a switch to protect a network from rogue DHCPv4 servers or other devices which send port-related information to a DHCPv4 server. This information can be useful in tracking an IP address back to a physical port. This section describes commands used to configure DHCPv4 snooping.

Table 56: DHCP Snooping Commands

Command	Function	Mode
ip dhcp snooping	Enables DHCP snooping globally	GC
ip dhcp snooping information option	Enables or disables the use of DHCP Option 82 information, and specifies frame format for the remote-id	GC
ip dhcp snooping information option encode no-subtype	Disables use of sub-type and sub-length for the CID/RID in Option 82 information	GC
ip dhcp snooping information option remote-id	Sets the remote ID to the switch's IP address, MAC address, or arbitrary string, TR-101 compliant node identifier, or removes VLAN ID from the end of the TR101 field	GC
ip dhcp snooping information option tr101 board-id	Sets the board identifier used in Option 82 information based on TR-101 syntax	GC
ip dhcp snooping information policy	Sets the information option policy for DHCP client packets that include Option 82 information	GC
ip dhcp snooping verify mac-address	Verifies the client's hardware address stored in the DHCP packet against the source MAC address in the Ethernet header	GC
ip dhcp snooping vlan	Enables DHCP snooping on the specified VLAN	GC
ip dhcp snooping information option circuit-id	Enables or disables the use of DHCP Option 82 information circuit-id suboption	IC

Table 56: DHCP Snooping Commands (Continued)

Command	Function	Mode
ip dhcp snooping trust	Configures the specified interface as trusted	IC
ip dhcp snooping max-number	configures the maximum number of DHCP clients which can be supported per interface	IC
ip dhcp snooping information option circuit-id	Enables or disables the use of DHCP Option 82 information circuit-id suboption	IC
ip dhcp snooping trust	Configures the specified interface as trusted	IC
clear ip dhcp snooping binding	Clears DHCP snooping binding table entries from RAM	PE
clear ip dhcp snooping database flash	Removes all dynamically learned snooping entries from flash memory.	PE
ip dhcp snooping database flash	Writes all dynamically learned snooping entries to flash memory	PE
show ip dhcp snooping	Shows the DHCP snooping configuration settings	PE
show ip dhcp snooping binding	Shows the DHCP snooping binding table entries	PE

ip dhcp snooping

This command enables DHCP snooping globally. Use the **no** form to restore the default setting.

Syntax

[**no**] **ip dhcp snooping**

Default Setting

Disabled

Command Mode

Global Configuration

Command Usage

- Network traffic may be disrupted when malicious DHCP messages are received from an outside source. DHCP snooping is used to filter DHCP messages received on an unsecure interface from outside the network or fire wall. When DHCP snooping is enabled globally by this command, and enabled on a VLAN interface by the ip dhcp snooping vlan command, DHCP messages received on an untrusted interface (as specified by the no ip dhcp snooping trust command) from a device not listed in the DHCP snooping table will be dropped.

- When enabled, DHCP messages entering an untrusted interface are filtered based upon dynamic entries learned via DHCP snooping.

- Table entries are only learned for trusted interfaces. Each entry includes a MAC address, IP address, lease time, VLAN identifier, and port identifier.

- When DHCP snooping is enabled, the rate limit for the number of DHCP messages that can be processed by the switch is 100 packets per second. Any DHCP packets in excess of this limit are dropped.

- Filtering rules are implemented as follows:

  - If global DHCP snooping is disabled, all DHCP packets are forwarded.

  - If DHCP snooping is enabled globally, and also enabled on the VLAN where the DHCP packet is received, all DHCP packets are forwarded for a *trusted* port. If the received packet is a DHCP ACK message, a dynamic DHCP snooping entry is also added to the binding table.

  - If DHCP snooping is enabled globally, and also enabled on the VLAN where the DHCP packet is received, but the port is *not trusted*, it is processed as follows:

    - If the DHCP packet is a reply packet from a DHCP server (including OFFER, ACK or NAK messages), the packet is dropped.

    - If the DHCP packet is from a client, such as a DECLINE or RELEASE message, the switch forwards the packet only if the corresponding entry is found in the binding table.

    - If the DHCP packet is from client, such as a DISCOVER, REQUEST, INFORM, DECLINE or RELEASE message, the packet is forwarded if MAC address verification is disabled (as specified by the ip dhcp snooping verify mac-address command). However, if MAC address verification is enabled, then the packet will only be forwarded if the client's hardware address stored in the DHCP packet is the same as the source MAC address in the Ethernet header.

    - If the DHCP packet is not a recognizable type, it is dropped.

  - If a DHCP packet from a client passes the filtering criteria above, it will only be forwarded to trusted ports in the same VLAN.

  - If a DHCP packet is from server is received on a trusted port, it will be forwarded to both trusted and untrusted ports in the same VLAN.

- If DHCP snooping is globally disabled, all dynamic bindings are removed from the binding table.

- *Additional considerations when the switch itself is a DHCP client* – The port(s) through which the switch submits a client request to the DHCP server must be configured as trusted (using the ip dhcp snooping trust command). Note that the switch will not add a dynamic entry for itself to the binding table when it receives an ACK message from a DHCP server. Also, when the switch sends out DHCP client packets for itself, no filtering takes place. However, when the

switch receives any messages from a DHCP server, any packets received from untrusted ports are dropped.

Example

This example enables DHCP snooping globally for the switch.

```
Console(config)#ip dhcp snooping
Console(config)#
```

Related Commands

ip dhcp snooping vlan (291)
ip dhcp snooping trust (295)

ip dhcp snooping information option

This command enables the use of DHCP Option 82 information for the switch, and specifies the frame format to use for the remote-id when Option 82 information is generated by the switch. Use the **no** form without any keywords to disable this function, the no form with the encode no-subtype keyword to enable use of sub-type and sub-length in CID/RID fields, or the **no** form with the **remote-id** keyword to set the remote ID to the switch's MAC address encoded in hexadecimal.

Syntax

ip dhcp snooping information option
[**encode no-subtype**] [**remote-id** {**ip-address** [**encode** {**ascii** | **hex**}] | **mac-address** [**encode** {**ascii** | **hex**}] | **string** *string*}]

no ip dhcp snooping information option [**encode no-subtype**]
[**remote-id** [**ip-address encode**] | [**mac-address encode**]]

encode no-subtype - Disables use of sub-type and sub-length fields in circuit-ID (CID) and remote-ID (RID) in Option 82 information.

mac-address - Inserts a MAC address in the remote ID sub-option for the DHCP snooping agent (that is, the MAC address of the switch's CPU).

ip-address - Inserts an IP address in the remote ID sub-option for the DHCP snooping agent (that is, the IP address of the management interface).

encode - Indicates encoding in ASCII or hexadecimal.

string - An arbitrary string inserted into the remote identifier field. (Range: 1-32 characters)

Default Setting

Option 82: Disabled
CID/RID sub-type: Enabled
Remote ID: MAC address (hexadecimal)

Command Mode

Global Configuration

Command Usage

- DHCP provides a relay mechanism for sending information about the switch and its DHCP clients to the DHCP server. Known as DHCP Option 82, it allows compatible DHCP servers to use the information when assigning IP addresses, or to set other services or policies for clients.

- When the DHCP Snooping Information Option 82 is enabled, the requesting client (or an intermediate relay agent that has used the information fields to describe itself) can be identified in the DHCP request packets forwarded by the switch and in reply packets sent back from the DHCP server.

- When the DHCP Snooping Information Option is enabled, clients can be identified by the switch port to which they are connected rather than just their MAC address. DHCP client-server exchange messages are then forwarded directly between the server and client without having to flood them to the entire VLAN.

- DHCP snooping must be enabled for the DHCP Option 82 information to be inserted into packets. When enabled, the switch will only add/remove option 82 information in incoming DHCP packets but not relay them. Packets are processed as follows:
  - If an incoming packet is a DHCP request packet with option 82 information, it will modify the option 82 information according to settings specified with ip dhcp snooping information policy command.
  - If an incoming packet is a DHCP request packet without option 82 information, enabling the DHCP snooping information option will add option 82 information to the packet.
  - If an incoming packet is a DHCP reply packet with option 82 information, enabling the DHCP snooping information option will remove option 82 information from the packet.

Example

This example enables the DHCP Snooping Information Option.

```
Console(config)#ip dhcp snooping information option
Console(config)#
```

ip dhcp snooping information option encode no-subtype

This command disables the use of sub-type and sub-length fields for the circuit-ID (CID) and remote-ID (RID) in Option 82 information generated by the switch. Use the **no** form to enable the use of these fields.

Syntax

[**no**] **ip dhcp snooping information option encode no-subtype**

Default Setting

Enabled

Command Mode
Global Configuration

Command Usage
- Option 82 information generated by the switch is based on TR-101 syntax as shown below:

Table 57: Option 82 information

82	3-69	1	1-67	x1	x2	x3	x4	x5	x63
opt82	opt-len	sub-opt1	string-len			R-124 string			

The circuit identifier used by this switch starts at sub-option1 and goes to the end of the R-124 string. The R-124 string includes the following information:

- sub-type - Distinguishes different types of circuit IDs.
- sub-length - Length of the circuit ID type
- access node identifier - ASCII string. Default is the MAC address of the switch's CPU. This field is set by the ip dhcp snooping information option command,
- eth - The second field is the fixed string "eth"
- slot - The slot represents the stack unit for this system.
- port - The port which received the DHCP request. If the packet arrives over a trunk, the value is the ifIndex of the trunk.
- vlan - Tag of the VLAN which received the DHCP request.

  Note that the sub-type and sub-length fields can be enabled or disabled using the ip dhcp snooping information option command.
- The **ip dhcp snooping information option circuit-id** command can be used to modify the default settings described above.

- The format for TR101 option 82 is: "<IP> eth <SID>/<PORT>[:<VLAN>]". Note that the SID (Switch ID) is always 0. By default the PVID is added to the end of the TR101 field for untagged packets. For tagged packets, the VLAN ID is always added.

Example
This example enables the use of sub-type and sub-length fields for the circuit-ID (CID) and remote-ID (RID).

```
Console(config)#no ip dhcp snooping information option encode no-subtype
Console(config)#
```

ip dhcp snooping information option remote-id

This command sets the remote ID to the switch's IP address, MAC address, or arbitrary string, TR-101 compliant node identifier, or removes VLAN ID from the end of the TR101 field. Use the **no** form to restore the default setting.

Syntax

ip dhcp snooping information option remote-id
{**ip-address** [**encode** {**ascii** | **hex**}] |
mac-address [**encode** {**ascii** | **hex**}] | **string** *string* |
tr101 {**node-identifier** {**ip** | **sysname**} | **no-vlan-field**}

no ip dhcp snooping information option remote-id
[**ip-address encode**] | [**mac-address encode**] | [**tr101 no-vlan-field**]

mac-address - Inserts a MAC address in the remote ID sub-option for the DHCP snooping agent (that is, the MAC address of the switch's CPU).

ip-address - Inserts an IP address in the remote ID sub-option for the DHCP snooping agent (that is, the IP address of the management interface).

encode - Indicates encoding in ASCII or hexadecimal.

string - An arbitrary string inserted into the remote identifier field. (Range: 1-32 characters)

tr101 node-identifier - The remote ID generated by the switch is based on TR-101 syntax (R-124, Access_Node_ID).

ip - Specifies the switch's IP address as the node identifier.

sysname - Specifies the system name as the node identifier.

tr101 no-vlan-field - Do not add ":VLAN" in TR101 field for untagged packets.

Default Setting

MAC address: hexadecimal
tr101 no-vlan-field: disabled

Command Mode

Global Configuration

Command Usage

The format for TR101 option 82 is: "<IP> eth <SID>/<PORT>[:<VLAN>]". Note that the SID (Switch ID) is always 0. By default the PVID is added to the end of the TR101 field for untagged packets. For tagged packets, the VLAN ID is always added. Use the **ip dhcp snooping information option remote-id tr101 no-vlan-field** command to remove the VLAN ID from the end of the TR101 field for untagged packets. Use the **no** form of this command to add the PVID for untagged packets at the end of the TR101 field.

Example

This example sets the remote ID to the switch's IP address.

```
Console(config)#ip dhcp snooping information option remote-id tr101
  node-identifier ip
Console(config)#
```

ip dhcp snooping information option tr101 board-id

This command sets the board identifier used in Option 82 information based on TR-101 syntax. Use the **no** form to remove the board identifier.

Syntax

ip dhcp snooping information option tr101 board-id *board-id*

no ip dhcp snooping information option tr101 board-id

board-id – TR101 Board ID. (Range: 0-9)

Default Setting

not defined

Command Mode

Global Configuration

Example

This example sets the board ID to 0.

```
Console(config)#ip dhcp snooping information option tr101 board-id 0
Console(config)#
```

ip dhcp snooping information policy

This command sets the DHCP snooping information option policy for DHCP client packets that include Option 82 information.

Syntax

ip dhcp snooping information policy {**drop** | **keep** | **replace**}

drop - Drops the client's request packet instead of relaying it.

keep - Retains the Option 82 information in the client request, and forwards the packets to trusted ports.

replace - Replaces the Option 82 information circuit-id and remote-id fields in the client's request with information about the relay agent itself, inserts the relay agent's address (when DHCP snooping is enabled), and forwards the packets to trusted ports.

Default Setting

replace

Command Mode
Global Configuration

Command Usage
When the switch receives DHCP packets from clients that already include DHCP Option 82 information, the switch can be configured to set the action policy for these packets. The switch can either drop the DHCP packets, keep the existing information, or replace it with the switch's relay information.

Example

```
Console(config)#ip dhcp snooping information policy drop
Console(config)#
```

ip dhcp snooping verify mac-address

This command verifies the client's hardware address stored in the DHCP packet against the source MAC address in the Ethernet header. Use the **no** form to disable this function.

Syntax

[**no**] **ip dhcp snooping verify mac-address**

Default Setting
Enabled

Command Mode
Global Configuration

Command Usage
If MAC address verification is enabled, and the source MAC address in the Ethernet header of the packet is not same as the client's hardware address in the DHCP packet, the packet is dropped.

Example
This example enables MAC address verification.

```
Console(config)#ip dhcp snooping verify mac-address
Console(config)#
```

Related Commands
ip dhcp snooping (283)
ip dhcp snooping vlan (291)
ip dhcp snooping trust (295)

ip dhcp snooping vlan

This command enables DHCP snooping on the specified VLAN. Use the **no** form to restore the default setting.

Syntax

[**no**] **ip dhcp snooping vlan** *vlan-id*

vlan-id - ID of a configured VLAN (Range: 1-4094)

Default Setting

Disabled

Command Mode

Global Configuration

Command Usage

- When DHCP snooping is enabled globally using the ip dhcp snooping command, and enabled on a VLAN with this command, DHCP packet filtering will be performed on any untrusted ports within the VLAN as specified by the ip dhcp snooping trust command.
- When the DHCP snooping is globally disabled, DHCP snooping can still be configured for specific VLANs, but the changes will not take effect until DHCP snooping is globally re-enabled.
- When DHCP snooping is globally enabled, and then disabled on a VLAN, all dynamic bindings learned for this VLAN are removed from the binding table.

Example

This example enables DHCP snooping for VLAN 1.

```
Console(config)#ip dhcp snooping vlan 1
Console(config)#
```

Related Commands

ip dhcp snooping (283)
ip dhcp snooping trust (295)

ip dhcp snooping information option circuit-id

This command specifies DHCP Option 82 circuit-id suboption information. Use the **no** form to use the default settings.

Syntax

ip dhcp snooping information option circuit-id string *string* | {**tr101** {**node-identifier** {**ip** | **sysname**} | **no-vlan-field**}

no dhcp snooping information option circuit-id [**tr101 no-vlan-field**]

string - An arbitrary string inserted into the circuit identifier field. (Range: 1-32 characters)

tr101 node-identifier - The remote ID generated by the switch is based on TR-101 syntax (R-124, Access_Node_ID).

ip - Specifies the switch's IP address as the node identifier.

sysname - Specifies the system name as the node identifier.

tr101 no-vlan-field - Do not add ":VLAN" in TR101 field for untagged packets.

Default Setting

VLAN-Unit-Port

Command Mode

Interface Configuration (Ethernet, Port Channel)

Command Usage

- DHCP provides a relay mechanism for sending information about the switch and its DHCP clients to the DHCP server. DHCP Option 82 allows compatible DHCP servers to use the information when assigning IP addresses, to set other services or policies for clients. For more information of this process, refer to the Command Usage section under the ip dhcp snooping information option command.

- Option 82 information generated by the switch is based on TR-101 syntax as shown below:

Table 58: Option 82 information

82	3-69	1	1-67	x1	x2	x3	x4	x5	x63
opt82	opt-len	sub-opt1	string-len			R-124 string			

The circuit identifier used by this switch starts at sub-option1 and goes to the end of the R-124 string. The R-124 string includes the following information:

- sub-type - Distinguishes different types of circuit IDs.
- sub-length - Length of the circuit ID type

- access node identifier - ASCII string. Default is the MAC address of the switch's CPU. This field is set by the ip dhcp snooping information option command,
- eth - The second field is the fixed string "eth"
- slot - The slot represents the stack unit for this system.
- port - The port which received the DHCP request. If the packet arrives over a trunk, the value is the ifIndex of the trunk.
- vlan - Tag of the VLAN which received the DHCP request.

  Note that the sub-type and sub-length fields can be enabled or disabled using the ip dhcp snooping information option command.
- The **ip dhcp snooping information option circuit-id** command can be used to modify the default settings described above.

◆ The format for TR101 option 82 is: "<IP> eth <SID>/<PORT>[:<VLAN>]". Note that the SID (Switch ID) is always 0. By default the PVID is added to the end of the TR101 field for untagged packets. For tagged packets, the VLAN ID is always added. Use the **ip dhcp snooping information option remote-id tr101 no-vlan-field** command to remove the VLAN ID from the end of the TR101 field for untagged packets. Use the **no** form of this command to add the PVID for untagged packets at the end of the TR101 field.

Example

This example sets the DHCP Snooping Information circuit-id suboption string.

```
Console(config)#interface ethernet 1/1
Console(config-if)#ip dhcp snooping information option circuit-id string 4500
Console(config-if)#
```

ip dhcp snooping trust

This command configures the specified interface as trusted. Use the **no** form to restore the default setting.

Syntax

[**no**] **ip dhcp snooping trust**

Default Setting

All interfaces are untrusted

Command Mode

Interface Configuration (Ethernet, Port Channel)

Command Usage

◆ A trusted interface is an interface that is configured to receive only messages from within the network. An untrusted interface is an interface that is configured to receive messages from outside the network or fire wall.

- Set all ports connected to DHCP servers within the local network or fire wall to trusted, and all other ports outside the local network or fire wall to untrusted.
- When DHCP snooping is enabled globally using the ip dhcp snooping command, and enabled on a VLAN with ip dhcp snooping vlan command, DHCP packet filtering will be performed on any untrusted ports within the VLAN according to the default status, or as specifically configured for an interface with the **no ip dhcp snooping trust** command.
- When an untrusted port is changed to a trusted port, all the dynamic DHCP snooping bindings associated with this port are removed.
- *Additional considerations when the switch itself is a DHCP client* – The port(s) through which it submits a client request to the DHCP server must be configured as trusted.

Example

This example sets port 5 to untrusted.

```
Console(config)#interface ethernet 1/5
Console(config-if)#no ip dhcp snooping trust
Console(config-if)#
```

ip dhcp snooping max-number

This command configures the maximum number of DHCP clients which can be supported per interface. Use the **no** form to restore the default setting.

Syntax

ip dhcp snooping max-number *max-number*

no dhcp snooping max-number

max-number - Maximum number of DHCP clients. (Range: 1-32)

Default Setting

16

Command Mode

Interface Configuration (Ethernet, Port Channel)

Example

This example sets the maximum number of DHCP clients supported on port 1 to 2.

```
Console(config)#interface ethernet 1/1
Console(config-if)#ip dhcp snooping max-number 2
Console(config-if)#
```

ip dhcp snooping trust

This command configures the specified interface as trusted. Use the **no** form to restore the default setting.

Syntax

[**no**] **ip dhcp snooping trust**

Default Setting

All interfaces are untrusted

Command Mode

Interface Configuration (Ethernet, Port Channel)

Command Usage

- A trusted interface is an interface that is configured to receive only messages from within the network. An untrusted interface is an interface that is configured to receive messages from outside the network or fire wall.
- Set all ports connected to DHCP servers within the local network or fire wall to trusted, and all other ports outside the local network or fire wall to untrusted.
- When DHCP snooping is enabled globally using the ip dhcp snooping command, and enabled on a VLAN with ip dhcp snooping vlan command, DHCP packet filtering will be performed on any untrusted ports within the VLAN according to the default status, or as specifically configured for an interface with the **no ip dhcp snooping trust** command.
- When an untrusted port is changed to a trusted port, all the dynamic DHCP snooping bindings associated with this port are removed.
- *Additional considerations when the switch itself is a DHCP client* – The port(s) through which it submits a client request to the DHCP server must be configured as trusted.

Example

This example sets port 5 to untrusted.

```
Console(config)#interface ethernet 1/5
Console(config-if)#no ip dhcp snooping trust
Console(config-if)#
```

Related Commands

ip dhcp snooping (283)
ip dhcp snooping vlan (291)

clear ip dhcp snooping binding

This command clears DHCP snooping binding table entries from RAM. Use this command without any optional keywords to clear all entries from the binding table.

Syntax

clear ip dhcp snooping binding *mac-address ip-address*

mac-address - Specifies a MAC address entry. (Format: xx-xx-xx-xx-xx-xx)

ip-address - Specifies the IP address bound to this entry.

Command Mode

Privileged Exec

Example

```
Console#clear ip dhcp snooping binding 11-22-33-44-55-66 vlan 1
Console#
```

clear ip dhcp snooping database flash

This command removes all dynamically learned snooping entries from flash memory.

Command Mode

Privileged Exec

Example

```
Console#clear ip dhcp snooping database flash
Console#
```

ip dhcp snooping database flash

This command writes all dynamically learned snooping entries to flash memory.

Command Mode

Privileged Exec

Command Usage

This command can be used to store the currently learned dynamic DHCP snooping entries to flash memory. These entries will be restored to the snooping table when the switch is reset. However, note that the lease time shown for a dynamic entry that has been restored from flash memory will no longer be valid.

Example

```
Console#ip dhcp snooping database flash
Console#
```

show ip dhcp snooping

This command shows the DHCP snooping configuration settings.

Command Mode

Privileged Exec

Example

```
Console#show ip dhcp snooping
Global DHCP Snooping Status: disabled
DHCP Snooping Information Option Status: disabled
DHCP Snooping Information Option Sub-option Format: extra subtype included
DHCP Snooping Information Option Remote ID: MAC Address (hex encoded)
DHCP Snooping Information Option Remote ID TR101 VLAN Field: enabled
DHCP Snooping Information Option TR101 Board ID: none
DHCP Snooping Information Policy: replace
DHCP Snooping is configured on the following VLANs:

Verify Source MAC-Address: enabled
                              Circuit-ID       Circuit-ID    Circuit-ID
Interface Trusted Max-Number  Mode             Value         TR101 VLAN Field
--------- ------- ----------  ---------------  ------------  ----------------
Eth 1/1   No      16          VLAN-Unit-Port   ---           enabled
Eth 1/2   No      16          VLAN-Unit-Port   ---           enabled
Eth 1/3   No      16          VLAN-Unit-Port   ---           enabled
Eth 1/4   No      16          VLAN-Unit-Port   ---           enabled
Eth 1/5   No      16          VLAN-Unit-Port   ---           enabled
.
.
.
```

show ip dhcp snooping binding

This command shows the DHCP snooping binding table entries.

Command Mode

Privileged Exec

Example

```
Console#show ip dhcp snooping binding
MAC Address       IP Address      Lease(sec) Type                VLAN Interface
----------------- --------------- ---------- -------------------- ---- ------
11-22-33-44-55-66 192.168.0.99             0 Dynamic-DHCPSNP       1 Eth 1/5
Console#
```

IPv4 Source Guard

IPv4 Source Guard is a security feature that filters IPv4 traffic on network interfaces based on manually configured entries in the IPv4 Source Guard table, or dynamic entries in the DHCPv4 Snooping table when enabled (see "DHCPv4 Snooping" on page 282). IPv4 source guard can be used to prevent traffic attacks caused when a host tries to use the IPv4 address of a neighbor to access the network. This section describes commands used to configure IPv4 Source Guard.

Table 59: IPv4 Source Guard Commands

Command	Function	Mode
ip source-guard binding	Adds a static address to the source-guard binding table	GC
ip source-guard	Configures the switch to filter inbound traffic based on source IP address, or source IP address and corresponding MAC address	IC
ip source-guard max-binding	Sets the maximum number of entries that can be bound to an interface	IC
ip source-guard mode	Sets the source-guard learning mode to search for addresses in the ACL binding table or the MAC address binding table	IC
clear ip source-guard binding blocked	Remove all blocked records	PE
show ip source-guard	Shows whether source guard is enabled or disabled on each interface	PE
show ip source-guard binding	Shows the source guard binding table	PE

ip source-guard binding

This command adds a static address to the source-guard ACL or MAC address binding table. Use the **no** form to remove a static entry.

Syntax

ip source-guard binding [**mode** {**acl** | **mac**}] *mac-address* **vlan** *vlan-id ip-address* **interface ethernet** *unit/port-list*

no ip source-guard binding [**mode** {**acl** | **mac**}] *mac-address* **vlan** *vlan-id*

mode - Specifies the binding mode.

acl - Adds binding to ACL table.

mac - Adds binding to MAC address table.

mac-address - A valid unicast MAC address.

vlan-id - ID of a configured VLAN for an ACL filtering table or a range of VLANs for a MAC address filtering table. To specify a list separate nonconsecutive VLAN identifiers with a comma and no spaces; use a hyphen to designate a range of IDs. (Range: 1-4094)

ip-address - A valid unicast IP address, including classful types A, B or C.

unit - Unit identifier. (Range: 1)

port-list - Physical port number or list of port numbers. Separate nonconsecutive port numbers with a comma and no spaces; or use a hyphen to designate a range of port numbers. (Range: 1-52)

Default Setting
No configured entries

Command Mode
Global Configuration

Command Usage
- If the binding mode is not specified in this command, the entry is bound to the ACL table by default.
- Table entries include a MAC address, IP address, lease time, entry type (Static-IP-SG-Binding, Dynamic-DHCP-Binding), VLAN identifier, and port identifier.
- All static entries are configured with an infinite lease time, which is indicated with a value of zero by the show ip source-guard command (page 304).
- When source guard is enabled, traffic is filtered based upon dynamic entries learned via DHCP snooping, or static addresses configured in the source guard binding table with this command.
- An entry with same MAC address and a different VLAN ID cannot be added to the binding table.
- Static bindings are processed as follows:
  - A valid static IP source guard entry will be added to the binding table in ACL mode if one of the following conditions is true:
    - If there is no binding entry with the same VLAN ID and MAC address, a new entry will be added to the binding table using the type of static IP source guard binding.
    - If there is an entry with the same VLAN ID and MAC address, and the type of entry is static IP source guard binding, then the new entry will replace the old one.
    - If there is an entry with the same VLAN ID and MAC address, and the type of the entry is dynamic DHCP snooping binding, then the new entry will replace the old one and the entry type will be changed to static IP source guard binding.
  - A valid static IP source guard entry will be added to the binding table in MAC mode if one of the following conditions are true:
    - If there is no binding entry with the same IP address and MAC address, a new entry will be added to the binding table using the type of static IP source guard binding entry.

- If there is a binding entry with same IP address and MAC address, then the new entry shall replace the old one.

- Only unicast addresses are accepted for static bindings.

Example

This example configures a static source-guard binding on port 5. Since the binding mode is not specified, the entry is bound to the ACL table by default.

```
Console(config)#ip source-guard binding 11-22-33-44-55-66 vlan 1 192.168.0.99
  interface ethernet 1/5
Console(config-if)#
```

Related Commands

ip source-guard (300)
ip dhcp snooping (283)
ip dhcp snooping vlan (291)

ip source-guard

This command configures the switch to filter inbound traffic based on source IP address, or source IP address and corresponding MAC address. Use the **no** form to disable this function.

Syntax

ip source-guard {**sip** | **sip-mac**}

no ip source-guard

sip - Filters traffic based on IP addresses stored in the binding table.

sip-mac - Filters traffic based on IP addresses and corresponding MAC addresses stored in the binding table.

Default Setting

Disabled

Command Mode

Interface Configuration (Ethernet)

Command Usage

- Source guard is used to filter traffic on an insecure port which receives messages from outside the network or fire wall, and therefore may be subject to traffic attacks caused by a host trying to use the IP address of a neighbor.

- Setting source guard mode to “sip” or “sip-mac” enables this function on the selected port. Use the “sip” option to check the VLAN ID, source IP address, and port number against all entries in the binding table. Use the “sip-mac” option to check these same parameters, plus the source MAC address. Use the **no ip source guard** command to disable this function on the selected port.

- When enabled, traffic is filtered based upon dynamic entries learned via DHCP snooping, or static addresses configured in the source guard binding table.
- Table entries include a MAC address, IP address, lease time, entry type (Static-IP-SG-Binding, Dynamic-DHCP-Binding, VLAN identifier, and port identifier.
- Static addresses entered in the source guard binding table with the ip source-guard binding command are automatically configured with an infinite lease time. Dynamic entries learned via DHCP snooping are configured by the DHCP server itself.
- If the IP source guard is enabled, an inbound packet's IP address (sip option) or both its IP address and corresponding MAC address (sip-mac option) will be checked against the binding table. If no matching entry is found, the packet will be dropped.
- Filtering rules are implemented as follows:
  - If DHCPv4 snooping is disabled (see page 283), IP source guard will check the VLAN ID, source IP address, port number, and source MAC address (for the sip-mac option). If a matching entry is found in the binding table and the entry type is static IP source guard binding, the packet will be forwarded.
  - If the DHCP snooping is enabled, IP source guard will check the VLAN ID, source IP address, port number, and source MAC address (for the sip-mac option). If a matching entry is found in the binding table and the entry type is static IP source guard binding, or dynamic DHCP snooping binding, the packet will be forwarded.
  - If IP source guard is enabled on an interface for which IP source bindings (dynamically learned via DHCP snooping or manually configured) are not yet configured, the switch will drop all IP traffic on that port, except for DHCP packets allowed by DHCP snooping.
  - Only unicast addresses are accepted for static bindings.

Example

This example enables IP source guard on port 5.

```
Console(config)#interface ethernet 1/5
Console(config-if)#ip source-guard sip
Console(config-if)#
```

Related Commands

ip source-guard binding (298)
ip dhcp snooping (283)
ip dhcp snooping vlan (291)

ip source-guard max-binding

This command sets the maximum number of entries that can be bound to an interface. Use the **no** form to restore the default setting.

Syntax

ip source-guard [**mode** {**acl** | **mac**}] **max-binding** *number*

no ip source-guard [**mode** {**acl** | **mac**}] **max-binding**

mode - Specifies the learning mode.

acl - Searches for addresses in the ACL table.

mac - Searches for addresses in the MAC address table.

number - The maximum number of IP addresses that can be mapped to an interface in the binding table. (Range: 1-5 for ACL mode; 1-32 for MAC mode)

Default Setting

Mode: ACL, Maximum Binding: 5
Mode: MAC, Maximum Binding: 16

Command Mode

Interface Configuration (Ethernet)

Command Usage

- This command sets the maximum number of address entries that can be mapped to an interface in the binding table for the specified mode (ACL binding table or MAC address table) including dynamic entries discovered by DHCP snooping and static entries set by the ip source-guard command.
- The maximum binding for ACL mode restricts the number of "active" entries per port. If binding entries exceed the maximum number in IP source guard, only the maximum number of binding entries will be set. Dynamic binding entries exceeding the maximum number will be created but will not be active.
- The maximum binding for MAC mode restricts the number of MAC addresses learned per port. Authenticated IP traffic with different source MAC addresses cannot be learned if it would exceed this maximum number.

Example

This example sets the maximum number of allowed entries in the binding table for port 5 to one entry. The mode is not specified, and therefore defaults to the ACL binding table.

```
Console(config)#interface ethernet 1/5
Console(config-if)#ip source-guard max-binding 1
Console(config-if)#
```

ip source-guard mode

This command sets the source-guard learning mode to search for addresses in the ACL binding table or the MAC address binding table. Use the **no** form to restore the default setting.

Syntax

ip source-guard mode {**acl** | **mac**}

no ip source-guard mode

mode - Specifies the learning mode.

acl - Searches for addresses in the ACL binding table.

mac - Searches for addresses in the MAC address binding table.

Default Setting

ACL

Command Mode

Interface Configuration (Ethernet)

Command Usage

There are two modes for the filtering table:

- ACL - IP traffic will be forwarded if it passes the checking process in the ACL mode binding table.
- MAC - A MAC entry will be added in MAC address table if IP traffic passes the checking process in MAC mode binding table.

Example

This command sets the binding table mode for the specified interface to MAC mode:

```
Console(config)#interface ethernet 1/5
Console(config-if)#ip source-guard mode mac
Console(config-if)#
```

clear ip source-guard binding blocked

This command clears source-guard binding table entries from RAM.

Syntax

clear ip source-guard binding blocked

Command Mode

Privileged Exec

Command Usage

When IP Source-Guard detects an invalid packet it creates a blocked record. These records can be viewed using the show ip source-guard binding blocked command. A maximum of 512 blocked records can be

stored before the switch overwrites the oldest record with new blocked records. Use the **clear ip source-guard binding blocked** command to clear this table.

Example

This command clears the blocked record table.

```
Console(config)#clear ip source-guard binding blocked
Console(config)#
```

show ip source-guard

This command shows whether source guard is enabled or disabled on each interface.

Command Mode

Privileged Exec

Example

```
Console#show ip source-guard
                                          ACL Table     MAC Table
Interface   Filter-type   Filter-table   Max-binding   Max-binding
---------   -----------   ------------   -----------   -----------
Eth 1/1     DISABLED      ACL                      5          1024
Eth 1/2     DISABLED      ACL                      5          1024
Eth 1/3     DISABLED      ACL                      5          1024
Eth 1/4     DISABLED      ACL                      5          1024
Eth 1/5     DISABLED      ACL                      5          1024
⋮
```

show ip source-guard binding

This command shows the source guard binding table.

Syntax

show ip source-guard binding [**dhcp-snooping** | **static** [**acl** | **mac**] | **blocked** [**vlan** *vlan-id* | **interface** *interface*]

dhcp-snooping - Shows dynamic entries configured with DHCP Snooping commands (see page 282)

static - Shows static entries configured with the ip source-guard binding command.

acl - Shows static entries in the ACL binding table.

mac - Shows static entries in the MAC address binding table.

blocked - Shows MAC addresses which have been blocked by IP Source Guard.

vlan-id - ID of a configured VLAN (Range: 1-4094)

interface - Specifies a port interface.

ethernet *unit/port*

unit - Unit identifier. (Range: 1)

port - Port number. (Range: 1-52)

Command Mode

Privileged Exec

Example

```
Console#show ip source-guard binding
MAC Address       IP Address      Type            VLAN      Interface
----------------- --------------- --------------- --------- ---------
00-10-b5-f4-d0-01 10.2.44.96      static-acl              1 Eth 1/1
Console#
```

ARP Inspection

ARP Inspection validates the MAC-to-IP address bindings in Address Resolution Protocol (ARP) packets. It protects against ARP traffic with invalid address bindings, which forms the basis for certain “man-in-the-middle” attacks. This is accomplished by intercepting all ARP requests and responses and verifying each of these packets before the local ARP cache is updated or the packet is forwarded to the appropriate destination, dropping any invalid ARP packets.

ARP Inspection determines the validity of an ARP packet based on valid IP-to-MAC address bindings stored in a trusted database – the DHCP snooping binding database. ARP Inspection can also validate ARP packets against user-configured ARP access control lists (ACLs) for hosts with statically configured IP addresses.

This section describes commands used to configure ARP Inspection.

Table 60: ARP Inspection Commands

Command	Function	Mode
ip arp inspection	Enables ARP Inspection globally on the switch	GC
ip arp inspection filter	Specifies an ARP ACL to apply to one or more VLANs	GC
ip arp inspection log-buffer logs	Sets the maximum number of entries saved in a log message, and the rate at these messages are sent	GC
ip arp inspection validate	Specifies additional validation of address components in an ARP packet	GC
ip arp inspection vlan	Enables ARP Inspection for a specified VLAN or range of VLANs	GC
ip arp inspection limit	Sets a rate limit for the ARP packets received on a port	IC
ip arp inspection trust	Sets a port as trusted, and thus exempted from ARP Inspection	IC

Table 60: ARP Inspection Commands (Continued)

Command	Function	Mode
show ip arp inspection configuration	Displays the global configuration settings for ARP Inspection	PE
show ip arp inspection interface	Shows the trust status and inspection rate limit for ports	PE
show ip arp inspection log	Shows information about entries stored in the log, including the associated VLAN, port, and address components	PE
show ip arp inspection statistics	Shows statistics about the number of ARP packets processed, or dropped for various reasons	PE
show ip arp inspection vlan	Shows configuration setting for VLANs, including ARP Inspection status, the ARP ACL name, and if the DHCP Snooping database is used after ACL validation is completed	PE

ip arp inspection

This command enables ARP Inspection globally on the switch. Use the **no** form to disable this function.

Syntax

[**no**] **ip arp inspection**

Default Setting

Disabled

Command Mode

Global Configuration

Command Usage

- When ARP Inspection is enabled globally with this command, it becomes active only on those VLANs where it has been enabled with the ip arp inspection vlan command.
- When ARP Inspection is enabled globally and enabled on selected VLANs, all ARP request and reply packets on those VLANs are redirected to the CPU and their switching is handled by the ARP Inspection engine.
- When ARP Inspection is disabled globally, it becomes inactive for all VLANs, including those where ARP Inspection is enabled.
- When ARP Inspection is disabled, all ARP request and reply packets bypass the ARP Inspection engine and their manner of switching matches that of all other packets.
- Disabling and then re-enabling global ARP Inspection will not affect the ARP Inspection configuration for any VLANs.

- When ARP Inspection is disabled globally, it is still possible to configure ARP Inspection for individual VLANs. These configuration changes will only become active after ARP Inspection is globally enabled again.

Example

```
Console(config)#ip arp inspection
Console(config)#
```

ip arp inspection filter

This command specifies an ARP ACL to apply to one or more VLANs. Use the **no** form to remove an ACL binding. Use the **no** form to remove an ACL binding.

Syntax

ip arp inspection filter *arp-acl-name* **vlan** {*vlan-id* | *vlan-range*} [**static**]

no ip arp inspection filter *arp-acl-name* **vlan** {*vlan-id* | *vlan-range*}

arp-acl-name - Name of an ARP ACL. (Maximum length: 16 characters)

vlan-id - VLAN ID. (Range: 1-4094)

vlan-range - A consecutive range of VLANs indicated by the use a hyphen, or a random group of VLANs with each entry separated by a comma.

static - ARP packets are only validated against the specified ACL, address bindings in the DHCP snooping database is not checked.

Default Setting

ARP ACLs are not bound to any VLAN
Static mode is not enabled

Command Mode

Global Configuration

Command Usage

- ARP ACLs are configured with the commands described on page 344.
- If static mode is enabled, the switch compares ARP packets to the specified ARP ACLs. Packets matching an IP-to-MAC address binding in a permit or deny rule are processed accordingly. Packets not matching any of the ACL rules are dropped. Address bindings in the DHCP snooping database are not checked.
- If static mode is not enabled, packets are first validated against the specified ARP ACL. Packets matching a deny rule are dropped. All remaining packets are validated against the address bindings in the DHCP snooping database.

Example

```
Console(config)#ip arp inspection filter sales vlan 1
Console(config)#
```

ip arp inspection log-buffer logs

This command sets the maximum number of entries saved in a log message, and the rate at which these messages are sent. Use the **no** form to restore the default settings.

Syntax

ip arp inspection log-buffer logs *message-number* **interval** *seconds*

no ip arp inspection log-buffer logs

message-number - The maximum number of entries saved in a log message. (Range: 0-256, where 0 means no events are saved and no messages sent)

seconds - The interval at which log messages are sent. (Range: 0-86400)

Default Setting

Message Number: 20
Interval: 10 seconds

Command Mode

Global Configuration

Command Usage

- ARP Inspection must be enabled with the ip arp inspection command before this command will be accepted by the switch.
- By default, logging is active for ARP Inspection, and cannot be disabled.
- When the switch drops a packet, it places an entry in the log buffer. Each entry contains flow information, such as the receiving VLAN, the port number, the source and destination IP addresses, and the source and destination MAC addresses.
- If multiple, identical invalid ARP packets are received consecutively on the same VLAN, then the logging facility will only generate one entry in the log buffer and one corresponding system message.
- The maximum number of entries that can be stored in the log buffer is determined by the *message-number* parameter. If the log buffer fills up before a message is sent, the oldest entry will be replaced with the newest one.
- The switch generates a system message on a rate-controlled basis determined by the *seconds* values. After the system message is generated, all entries are cleared from the log buffer.

Example

```
Console(config)#ip arp inspection log-buffer logs 1 interval 10
Console(config)#
```

ip arp inspection validate

This command specifies additional validation of address components in an ARP packet. Use the **no** form to restore the default setting.

Syntax

ip arp inspection validate
{**dst-mac** [**ip** [**allow-zeros**] [**src-mac**]] |
ip [**allow-zeros**] [**src-mac**]] | **src-mac**}

no ip arp inspection validate

dst-mac - Checks the destination MAC address in the Ethernet header against the target MAC address in the ARP body. This check is performed for ARP responses. When enabled, packets with different MAC addresses are classified as invalid and are dropped.

ip - Checks the ARP body for invalid and unexpected IP addresses. Addresses include 0.0.0.0, 255.255.255.255, and all IP multicast addresses. Sender IP addresses are checked in all ARP requests and responses, while target IP addresses are checked only in ARP responses.

allow-zeros - Allows sender IP address to be 0.0.0.0.

src-mac - Checks the source MAC address in the Ethernet header against the sender MAC address in the ARP body. This check is performed on both ARP requests and responses. When enabled, packets with different MAC addresses are classified as invalid and are dropped.

Default Setting

No additional validation is performed

Command Mode

Global Configuration

Command Usage

By default, ARP Inspection only checks the IP-to-MAC address bindings specified in an ARP ACL or in the DHCP Snooping database.

Example

```
Console(config)#ip arp inspection validate dst-mac
Console(config)#
```

ip arp inspection vlan

This command enables ARP Inspection for a specified VLAN or range of VLANs. Use the **no** form to disable this function.

Syntax

[**no**] **ip arp inspection vlan** {*vlan-id* | *vlan-range*}

vlan-id - VLAN ID. (Range: 1-4094)

vlan-range - A consecutive range of VLANs indicated by the use a hyphen, or a random group of VLANs with each entry separated by a comma.

Default Setting

Disabled on all VLANs

Command Mode

Global Configuration

Command Usage

- When ARP Inspection is enabled globally with the ip arp inspection command, it becomes active only on those VLANs where it has been enabled with this command.
- When ARP Inspection is enabled globally and enabled on selected VLANs, all ARP request and reply packets on those VLANs are redirected to the CPU and their switching is handled by the ARP Inspection engine.
- When ARP Inspection is disabled globally, it becomes inactive for all VLANs, including those where ARP Inspection is enabled.
- When ARP Inspection is disabled, all ARP request and reply packets bypass the ARP Inspection engine and their manner of switching matches that of all other packets.
- Disabling and then re-enabling global ARP Inspection will not affect the ARP Inspection configuration for any VLANs.
- When ARP Inspection is disabled globally, it is still possible to configure ARP Inspection for individual VLANs. These configuration changes will only become active after ARP Inspection is globally enabled again.

Example

```
Console(config)#ip arp inspection vlan 1,2
Console(config)#
```

ip arp inspection limit

This command sets a rate limit for the ARP packets received on a port. Use the **no** form to restore the default setting.

Syntax

ip arp inspection limit {**rate** *pps* | **none**}

no ip arp inspection limit

pps - The maximum number of ARP packets that can be processed by the CPU per second on trusted or untrusted ports. (Range: 0-2048, where 0 means that no ARP packets can be forwarded)

none - There is no limit on the number of ARP packets that can be processed by the CPU.

Default Setting

15

Command Mode

Interface Configuration (Port, Static Aggregation)

Command Usage

- This command applies to both trusted and untrusted ports.
- When the rate of incoming ARP packets exceeds the configured limit, the switch drops all ARP packets in excess of the limit.

Example

```
Console(config)#interface ethernet 1/1
Console(config-if)#ip arp inspection limit rate 150
Console(config-if)#
```

ip arp inspection trust

This command sets a port as trusted, and thus exempted from ARP Inspection. Use the **no** form to restore the default setting.

Syntax

[**no**] **ip arp inspection trust**

Default Setting

Untrusted

Command Mode

Interface Configuration (Port, Static Aggregation)

Command Usage

Packets arriving on untrusted ports are subject to any configured ARP Inspection and additional validation checks. Packets arriving on trusted ports bypass all of these checks, and are forwarded according to normal switching rules.

Example

```
Console(config)#interface ethernet 1/1
Console(config-if)#ip arp inspection trust
Console(config-if)#
```

show ip arp inspection configuration

This command displays the global configuration settings for ARP Inspection.

Command Mode

Privileged Exec

Example

```
Console#show ip arp inspection configuration

ARP Inspection Global Information:

Global IP ARP Inspection Status : disabled
Log Message Interval            : 1 s
Log Message Number              : 5
Need Additional Validation(s)   : Yes
Additional Validation Type      : Destination MAC address
Console#
```

show ip arp inspection interface

This command shows the trust status and ARP Inspection rate limit for ports.

Syntax

show ip arp inspection interface [*interface*]

interface

ethernet *unit/port*

unit - Unit identifier. (Range: 1)

port - Port number. (Range: 1-52)

Command Mode

Privileged Exec

Example

```
Console#show ip arp inspection interface ethernet 1/1

Port Number        Trust Status             Rate Limit (pps)
-------------   --------------------    ------------------------------
Eth 1/1            Trusted                     150
Console#
```

show ip arp inspection log

This command shows information about entries stored in the log, including the associated VLAN, port, and address components.

Command Mode

Privileged Exec

Example

```
Console#show ip arp inspection log
Total log entries number is 1

Num VLAN Port Src IP Address  Dst IP Address  Src MAC Address  Dst MAC Address
--- ---- ---- --------------  --------------  ---------------  --------------
1   1     11  192.168.2.2     192.168.2.1     00-04-E2-A0-E2-7C FF-FF-FF-FF-FF-FF
Console#
```

show ip arp inspection statistics

This command shows statistics about the number of ARP packets processed, or dropped for various reasons.

Command Mode

Privileged Exec

Example

```
Console#show ip arp inspection statistics

ARP packets received                                              : 150
ARP packets dropped due to rate limt                              : 5
Total ARP packets processed by ARP Inspection                     : 150
ARP packets dropped by additional validation (source MAC address)     : 0
ARP packets dropped by additional validation (destination MAC address): 0
ARP packets dropped by additional validation (IP address)         : 0
ARP packets dropped by ARP ACLs                                   : 0
ARP packets dropped by DHCP snooping                              : 0

Console#
```

show ip arp inspection vlan

This command shows the configuration settings for VLANs, including ARP Inspection status, the ARP ACL name, and if the DHCP Snooping database is used after ARP ACL validation is completed.

Syntax

show ip arp inspection vlan [*vlan-id* | *vlan-range*]

vlan-id - Identifier for configured VLANs.

vlan-range - A consecutive range of VLANs indicated by the use a hyphen, or a random group of VLANs with each entry separated by a comma.

Command Mode

Privileged Exec

Example

```
Console#show ip arp inspection vlan 1

VLAN ID     DAI Status             ACL Name             ACL Status
--------   ---------------    --------------------    --------------------
1           disabled               sales                static
Console#
```

Denial of Service Protection

A denial-of-service attack (DoS attack) is an attempt to block the services provided by a computer or network resource. This kind of attack tries to prevent an Internet site or service from functioning efficiently or at all. In general, DoS attacks are implemented by either forcing the target to reset, to consume most of its resources so that it can no longer provide its intended service, or to obstruct the communication media between the intended users and the target so that they can no longer communicate adequately.

This section describes commands used to protect against DoS attacks.

Table 61: DoS Protection Commands

Command	Function	Mode
dos-protection echo-chargen	Protects against DoS echo/chargen attacks	GC
dos-protection smurf	Protects against DoS smurf attacks	GC
dos-protection tcp-flooding	Protects against DoS TCP-flooding attacks	GC
dos-protection tcp-null-scan	Protects against DoS TCP-null-scan attacks	GC
dos-protection tcp-syn-fin-scan	Protects against DoS TCP-SYN/FIN-scan attacks	GC
dos-protection tcp-xmas-scan	Protects against DoS TCP-XMAS-scan attacks	GC
dos-protection udp-flooding	Protects against DoS UDP-flooding attacks	GC
dos-protection win-nuke	Protects against DoS WinNuke attacks	GC
show dos-protection	Shows the configuration settings for DoS protection	PE

dos-protection echo-chargen

This command protects against DoS echo/chargen attacks in which the echo service repeats anything sent to it, and the chargen (character generator) service generates a continuous stream of data. When used together, they create an infinite loop and result in a denial-of-service. Use the **no** form without the bit rate parameter to disable this feature, or with the bit rate parameter to restore the defautl rate limit.

Syntax

[**no**] **dos-protection echo-chargen** [**bit-rate-in-kilo** *rate*]

rate – Maximum allowed rate. (Range: 64-2000 kbits/second)

Default Setting
Disabled, 1000 kbits/second

Command Mode
Global Configuration

Example

```
Console(config)#dos-protection echo-chargen bit-rate-in-kilo 65
Console(config)#
```

dos-protection smurf

This command protects against DoS smurf attacks in which a perpetrator generates a large amount of spoofed ICMP Echo Request traffic to the broadcast destination IP address (255.255.255.255), all of which uses a spoofed source address of the intended victim. The victim should crash due to the many interrupts required to send ICMP Echo response packets. Use the **no** form to disable this feature.

Syntax

[**no**] **dos-protection smurf**

Default Setting
Disabled

Command Mode
Global Configuration

Example

```
Console(config)#dos-protection smurf
Console(config)#
```

dos-protection tcp-flooding

This command protects against DoS TCP-flooding attacks in which a perpetrator sends a succession of TCP SYN requests (with or without a spoofed-Source IP) to a target and never returns ACK packets. These half-open connections will bind resources on the target, and no new connections can be made, resulting in a denial of service. Use the **no** form without the bit rate parameter to disable this feature, or with the bit rate parameter to restore the default rate limit.

Syntax

[**no**] **dos-protection tcp-flooding** [**bit-rate-in-kilo** *rate*]

rate – Maximum allowed rate. (Range: 64-2000 kbits/second)

Default Setting
Disabled, 1000 kbits/second

Command Mode
Global Configuration

Example

```
Console(config)#dos-protection tcp-flooding bit-rate-in-kilo 65
Console(config)#
```

dos-protection tcp-null-scan

This command protects against DoS TCP-null-scan attacks in which a TCP NULL scan message is used to identify listening TCP ports. The scan uses a series of strangely configured TCP packets which contain a sequence number of 0 and no flags. If the target's TCP port is closed, the target replies with a TCP RST (reset) packet. If the target TCP port is open, it simply discards the TCP NULL scan. Use the **no** form to disable this feature.

Syntax

[**no**] **dos-protection tcp-null-scan**

Default Setting
Disabled

Command Mode
Global Configuration

Example

```
Console(config)#dos-protection tcp-null-scan
Console(config)#
```

dos-protection tcp-syn-fin-scan

This command protects against DoS TCP-SYN/FIN-scan attacks in which a TCP SYN/FIN scan message is used to identify listening TCP ports. The scan uses a series of strangely configured TCP packets which contain SYN (synchronize) and FIN (finish) flags. If the target's TCP port is closed, the target replies with a TCP RST (reset) packet. If the target TCP port is open, it simply discards the TCP SYN FIN scan. Use the **no** form to disable this feature.

Syntax

[**no**] **dos-protection tcp-syn-fin-scan**

Default Setting
Disabled

Command Mode
Global Configuration

Example

```
Console(config)#dos-protection syn-fin-scan
Console(config)#
```

dos-protection tcp-xmas-scan

This command protects against DoS TCP-xmas-scan in which a so-called TCP XMAS scan message is used to identify listening TCP ports. This scan uses a series of strangely configured TCP packets which contain a sequence number of 0 and the URG, PSH and FIN flags. If the target's TCP port is closed, the target replies with a TCP RST packet. If the target TCP port is open, it simply discards the TCP XMAS scan. Use the **no** form to disable this feature.

Syntax

[**no**] **dos-protection tcp-xmas-scan**

Default Setting

Disabled

Command Mode

Global Configuration

Example

```
Console(config)#dos-protection tcp-xmas-scan
Console(config)#
```

dos-protection udp-flooding

This command protects against DoS UDP-flooding attacks in which a perpetrator sends a large number of UDP packets (with or without a spoofed-Source IP) to random ports on a remote host. The target will determine that application is listening at that port, and reply with an ICMP Destination Unreachable packet. It will be forced to send many ICMP packets, eventually leading it to be unreachable by other clients. Use the **no** form without the bit rate parameter to disable this feature, or with the bit rate parameter to restore the default rate limit.

Syntax

[**no**] **dos-protection udp-flooding** [**bit-rate-in-kilo** *rate*]

rate – Maximum allowed rate. (Range: 64-2000 kbits/second)

Default Setting

Disabled, 1000 kbits/second

Command Mode

Global Configuration

Example

```
Console(config)#dos-protection udp-flooding bit-rate-in-kilo 65
Console(config)#
```

dos-protection win-nuke

This command protects against DoS WinNuke attacks in which affected the Microsoft Windows 3.1x/95/NT operating systems. In this type of attack, the perpetrator sends the string of OOB out-of-band (OOB) packets contained a TCP URG flag to the target computer on TCP port 139 (NetBIOS), casing it to lock up and display a "Blue Screen of Death." This did not cause any damage to, or change data on, the computer's hard disk, but any unsaved data would be lost. Microsoft made patches to prevent the WinNuke attack, but the OOB packets still put the service in a tight loop that consumed all available CPU time. Use the **no** form without the bit rate parameter to disable this feature, or with the bit rate parameter to restore the default rate limit.

Syntax

[**no**] **dos-protection win-nuke** [**bit-rate-in-kilo** *rate*]

rate – Maximum allowed rate. (Range: 64-2000 kbits/second)

Default Setting

Disabled, 1000 kbits/second

Command Mode

Global Configuration

Example

```
Console(config)#dos-protection win-nuke bit-rate-in-kilo65
Console(config)#
```

show dos-protection

This command shows the configuration settings for the DoS protection commands.

Command Mode

Privileged Exec

Example

```
Console#show dos-protection
Global DoS Protection:

 Echo/Chargen Attack         : Disabled, 1000 kilobits per second
 Smurf Attack                : Enabled
 TCP Flooding Attack         : Disabled, 1000 kilobits per second
 TCP Null Scan               : Enabled
 TCP SYN/FIN Scan            : Enabled
 TCP XMAS Scan               : Enabled
 UDP Flooding Attack         : Disabled, 1000 kilobits per second
```

```
 WinNuke Attack              : Disabled, 1000 kilobits per second
Console#
```

Port-based Traffic Segmentation

If tighter security is required for passing traffic from different clients through downlink ports on the local network and over uplink ports to the service provider, port-based traffic segmentation can be used to isolate traffic for individual clients.

Traffic belonging to each client is isolated to the allocated downlink ports. But the switch can be configured to either isolate traffic passing across a client's allocated uplink ports from the uplink ports assigned to other clients, or to forward traffic through the uplink ports used by other clients, allowing different clients to share access to their uplink ports where security is less likely to be compromised.

Table 62: Commands for Configuring Traffic Segmentation

Command	Function	Mode
traffic-segmentation	Enables traffic segmentation	GC
traffic-segmentation session	Creates a client session	GC
traffic-segmentation uplink/downlink	Configures uplink/downlink ports for client sessions	GC
traffic-segmentation uplink-to-uplink	Specifies whether or not traffic can be forwarded between uplink ports assigned to different client sessions	GC
show traffic-segmentation	Displays the configured traffic segments	PE

traffic-segmentation

This command enables traffic segmentation. Use the **no** form to disable traffic segmentation.

Syntax

[**no**] **traffic-segmentation**

Default Setting

Disabled

Command Mode

Global Configuration

Command Usage

- Traffic segmentation provides port-based security and isolation between ports within the VLAN. Data traffic on the downlink ports can only be forwarded to, and from, the designated uplink port(s). Data cannot pass between downlink ports in the same segmented group, nor to ports which do not belong to the same group.

- Traffic segmentation and normal VLANs can exist simultaneously within the same switch. Traffic may pass freely between uplink ports in segmented groups and ports in normal VLANs.

- When traffic segmentation is enabled, the forwarding state for the uplink and downlink ports assigned to different client sessions is shown below.

Table 63: Traffic Segmentation Forwarding

Destination Source	Session #1 Downlinks	Session #1 Uplinks	Session #2 Downlinks	Session #2 Uplinks	Normal Ports
Session #1 Downlink Ports	Blocking	Forwarding	Blocking	Blocking	Blocking
Session #1 Uplink Ports	Forwarding	Forwarding	Blocking	Blocking/ Forwarding*	Forwarding
Session #2 Downlink Ports	Blocking	Blocking	Blocking	Forwarding	Blocking
Session #2 Uplink Ports	Blocking	Blocking/ Forwarding*	Forwarding	Forwarding	Forwarding
Normal Ports	Forwarding	Forwarding	Forwarding	Forwarding	Forwarding

* The forwarding state for uplink-to-uplink ports is configured by the traffic-segmentation uplink-to-uplink command.

- When traffic segmentation is disabled, all ports operate in normal forwarding mode based on the settings specified by other functions such as VLANs and spanning tree protocol.

- Enter the **traffic-segmentation** command without any parameters to enable traffic segmentation. Then set the interface members for segmented groups using the traffic-segmentation uplink/downlink command.

- Enter **no traffic-segmentation** to disable traffic segmentation and clear the configuration settings for segmented groups.

Example

This example enables traffic segmentation globally on the switch.

```
Console(config)#traffic-segmentation
Console(config)#
```

traffic-segmentation session

This command creates a traffic-segmentation client session. Use the **no** form to remove a client session.

Syntax

[**no**] **traffic-segmentation session** *session-id*

session-id – Traffic segmentation session. (Range: 1-4)

Default Setting
None

Command Mode
Global Configuration

Command Usage
- Use this command to create a new traffic-segmentation client session.
- Using the **no** form of this command will remove any assigned uplink or downlink ports, restoring these interfaces to normal operating mode.

Example

```
Console(config)#traffic-segmentation session 1
Console(config)#
```

traffic-segmentation uplink/downlink

This command configures the uplink and down-link ports for a segmented group of ports. Use the **no** form to remove a port from the segmented group.

Syntax

[**no**] **traffic-segmentation** [**session** *session-id*] {**uplink** *interface-list* [**downlink** *interface-list*] | **downlink** *interface-list*}

session-id – Traffic segmentation session. (Range: 1-4)

uplink – Specifies an uplink interface.

downlink – Specifies a downlink interface.

interface

ethernet *unit/port*

unit - Unit identifier. (Range: 1)

port - Port number. (Range: 1-52)

port-channel *channel-id* (Range: 1-8)

Default Setting
Session 1 if not defined
No segmented port groups are defined.

Command Mode
Global Configuration

Command Usage
- A port cannot be configured in both an uplink and downlink list.
- A port can only be assigned to one traffic-segmentation session.

- When specifying an uplink or downlink, a list of ports may be entered by using a hyphen or comma in the *port* field. Note that lists are not supported for the *channel-id* field.
- A downlink port can only communicate with an uplink port in the same session. Therefore, if an uplink port is not configured for a session, the assigned downlink ports will not be able to communicate with any other ports.
- If a downlink port is not configured for the session, the assigned uplink ports will operate as normal ports.

Example

This example enables traffic segmentation, and then sets port 10 as the uplink and ports 5-8 as downlinks.

```
Console(config)#traffic-segmentation
Console(config)#traffic-segmentation uplink ethernet 1/10
  downlink ethernet 1/5-8
Console(config)#
```

traffic-segmentation uplink-to-uplink

This command specifies whether or not traffic can be forwarded between uplink ports assigned to different client sessions. Use the **no** form to restore the default.

Syntax

[**no**] **traffic-segmentation uplink-to-uplink** {**blocking** | **forwarding**}

blocking – Blocks traffic between uplink ports assigned to different sessions.

forwarding – Forwards traffic between uplink ports assigned to different sessions.

Default Setting

Blocking

Command Mode

Global Configuration

Example

This example enables forwarding of traffic between uplink ports assigned to different client sessions.

```
Console(config)#traffic-segmentation uplink-to-uplink forwarding
Console(config)#
```

show traffic-segmentation

This command displays the configured traffic segments.

Command Mode

Privileged Exec

Example

```
Console#show traffic-segmentation

 Traffic segmentation Status :            Disabled
 Uplink-to-Uplink Mode :                  Forwarding
 Traffic segmentation Status :            Disabled
 Uplink-to-Uplink Mode       :            Forwarding

 Session   Uplink Ports                   Downlink Ports
--------- ----------------------------- -----------------------------
    1      Ethernet  1/1                 Ethernet  1/2
                                         Ethernet  1/3
                                         Ethernet  1/4
Console#
```

10 Access Control Lists

Access Control Lists (ACL) provide packet filtering for IPv4 frames (based on address, protocol, Layer 4 protocol port number or TCP control code), IPv6 frames (based on address, DSCP traffic class, or next header type), or any frames (based on MAC address or Ethernet type). To filter packets, first create an access list, add the required rules, and then bind the list to a specific port. This section describes the Access Control List commands.

Table 64: Access Control List Commands

Command Group	Function
IPv4 ACLs	Configures ACLs based on IPv4 addresses, TCP/UDP port number, protocol type, and TCP control code
IPv6 ACLs	Configures ACLs based on IPv6 addresses, DSCP traffic class, or next header type
MAC ACLs	Configures ACLs based on hardware addresses, packet format, and Ethernet type
ARP ACLs	Configures ACLs based on ARP messages addresses
ACL Information	Displays ACLs and associated rules; shows ACLs assigned to each port

IPv4 ACLs

The commands in this section configure ACLs based on IPv4 addresses, TCP/UDP port number, protocol type, and TCP control code. To configure IPv4 ACLs, first create an access list containing the required permit or deny rules, and then bind the access list to one or more ports.

Table 65: IPv4 ACL Commands

Command	Function	Mode
access-list ip	Creates an IP ACL and enters configuration mode for standard or extended IPv4 ACLs	GC
permit, deny	Filters packets matching a specified source IPv4 address	IPv4-STD-ACL
permit, deny	Filters packets meeting the specified criteria, including source and destination IPv4 address, TCP/UDP port number, protocol type, and TCP control code	IPv4-EXT-ACL
ip access-group	Binds an IPv4 ACL to a port	IC
show ip access-group	Shows port assignments for IPv4 ACLs	PE
show ip access-list	Displays the rules for configured IPv4 ACLs	PE

access-list ip

This command adds an IP access list and enters configuration mode for standard or extended IPv4 ACLs. Use the **no** form to remove the specified ACL.

Syntax

[**no**] **access-list ip** {**standard** | **extended**} *acl-name*

standard – Specifies an ACL that filters packets based on the source IP address.

extended – Specifies an ACL that filters packets based on the source or destination IP address, and other more specific criteria.

acl-name – Name of the ACL. (Maximum length: 32 characters)

Default Setting

None

Command Mode

Global Configuration

Command Usage

- When you create a new ACL or enter configuration mode for an existing ACL, use the **permit** or **deny** command to add new rules to the bottom of the list.
- To remove a rule, use the **no permit** or **no deny** command followed by the exact text of a previously configured rule.
- An ACL can contain up to 1K rules.

Example

```
Console(config)#access-list ip standard david
Console(config-std-acl)#
```

Related Commands

permit, deny (326)
show ip access-list (331)

permit, deny (Standard IP ACL)

This command adds a rule to a Standard IPv4 ACL. The rule sets a filter condition for packets emanating from the specified source. Use the **no** form to remove a rule.

Syntax

{**permit** | **deny**} {**any** | *source bitmask* | **host** *source*}
[**time-range** *time-range-name*]

no {**permit** | **deny**} {**any** | *source bitmask* | **host** *source*}

any – Any source IP address.

source – Source IP address.

bitmask – Dotted decimal number representing the address bits to match.

host – Keyword followed by a specific IP address.

time-range-name - Name of the time range. (Range: 1-16 characters)

Default Setting
None

Command Mode
Standard IPv4 ACL

Command Usage
- New rules are appended to the end of the list.
- Address bit masks are similar to a subnet mask, containing four integers from 0 to 255, each separated by a period. The binary mask uses 1 bits to indicate "match" and 0 bits to indicate "ignore." The bitmask is bitwise ANDed with the specified source IP address, and then compared with the address for each IP packet entering the port(s) to which this ACL has been assigned.

Example
This example configures one permit rule for the specific address 10.1.1.21 and another rule for the address range 168.92.16.x – 168.92.31.x using a bitmask.

```
Console(config-std-acl)#permit host 10.1.1.21
Console(config-std-acl)#permit 168.92.16.0 255.255.240.0
Console(config-std-acl)#
```

Related Commands
access-list ip (326)
Time Range (148)

permit, deny (Extended IPv4 ACL)

This command adds a rule to an Extended IPv4 ACL. The rule sets a filter condition for packets with specific source or destination IP addresses, protocol types, source or destination protocol ports, or TCP control codes. Use the **no** form to remove a rule.

Syntax

{**permit** | **deny**} [*protocol-number* | **udp**]
{**any** | *source address-bitmask* | **host** *source*}
{**any** | *destination address-bitmask* | **host** *destination*}
[**dscp** *dscp*] [**precedence** *precedence*]
[**source-port** *sport* [*bitmask*]]
[**destination-port** *dport* [*port-bitmask*]]
[**time-range** *time-range-name*]

no {**permit** | **deny**} [*protocol-number* | **udp**]
{**any** | *source address-bitmask* | **host** *source*}
{**any** | *destination address-bitmask* | **host** *destination*}
[**dscp** *dscp*] [**precedence** *precedence*]
[**source**-port *sport* [*bitmask*]]
[**destination**-port *dport* [*port-bitmask*]]

{**permit** | **deny**} **tcp**
{**any** | *source address-bitmask* | **host** *source*}
{**any** | *destination address-bitmask* | **host** *destination*}
[**dscp** *dscp*] [**precedence** *precedence*]
[**source-port** *sport* [*bitmask*]]
[**destination-port** *dport* [*port-bitmask*]]
[**control-flag** *control-flags flag-bitmask*]
[**time-range** *time-range-name*]

no {**permit** | **deny**} **tcp**
{**any** | *source address-bitmask* | **host** *source*}
{**any** | *destination address-bitmask* | **host** *destination*}
[**dscp** *dscp*] [**precedence** *precedence*]
[**source-port** *sport* [*bitmask*]]
[**destination-port** *dport* [*port-bitmask*]]
[**control-flag** *control-flags flag-bitmask*]

protocol-number – A specific protocol number. (Range: 0-255)

source – Source IP address.

destination – Destination IP address.

address-bitmask – Decimal number representing the address bits to match.

host – Keyword followed by a specific IP address.

dscp – DSCP priority level. (Range: 0-63)

precedence – IP precedence level. (Range: 0-7)

sport – Protocol[4] source port number. (Range: 0-65535)

dport – Protocol[4] destination port number. (Range: 0-65535)

port-bitmask – Decimal number representing the port bits to match. (Range: 0-65535)

control-flags – Decimal number (representing a bit string) that specifies flag bits in byte 14 of the TCP header. (Range: 0-63)

flag-bitmask – Decimal number representing the code bits to match.

time-range-name - Name of the time range. (Range: 1-16 characters)

Default Setting
None

Command Mode
Extended IPv4 ACL

4. Includes TCP, UDP or other protocol types.

Command Usage

- All new rules are appended to the end of the list.

- Address bit masks are similar to a subnet mask, containing four integers from 0 to 255, each separated by a period. The binary mask uses 1 bits to indicate "match" and 0 bits to indicate "ignore." The bit mask is bitwise ANDed with the specified source IP address, and then compared with the address for each IP packet entering the port(s) to which this ACL has been assigned.

- The control-code bitmask is a decimal number (representing an equivalent bit mask) that is applied to the control code. Enter a decimal number, where the equivalent binary bit "1" means to match a bit and "0" means to ignore a bit. The following bits may be specified:
  - 1 (fin) – Finish
  - 2 (syn) – Synchronize
  - 4 (rst) – Reset
  - 8 (psh) – Push
  - 16 (ack) – Acknowledgement
  - 32 (urg) – Urgent pointer

  For example, use the code value and mask below to catch packets with the following flags set:
  - SYN flag valid, use "control-code 2 2"
  - Both SYN and ACK valid, use "control-code 18 18"
  - SYN valid and ACK invalid, use "control-code 2 18"

- If an Extended IPv4 rule and MAC rule match the same packet, and these rules specify a "permit" entry and "deny" entry, the "deny" action takes precedence.

Example

This example accepts any incoming packets if the source address is within subnet 10.7.1.x. For example, if the rule is matched; i.e., the rule (10.7.1.0 & 255.255.255.0) equals the masked address (10.7.1.2 & 255.255.255.0), the packet passes through.

```
Console(config-ext-acl)#permit 10.7.1.1 255.255.255.0 any
Console(config-ext-acl)#
```

This allows TCP packets from class C addresses 192.168.1.0 to any destination address when set for destination TCP port 80 (i.e., HTTP).

```
Console(config-ext-acl)#permit 192.168.1.0 255.255.255.0 any destination-port
  80
Console(config-ext-acl)#
```

This permits all TCP packets from class C addresses 192.168.1.0 with the TCP control code set to "SYN."

```
Console(config-ext-acl)#permit tcp 192.168.1.0 255.255.255.0 any control-
  flag 2 2
Console(config-ext-acl)#
```

Related Commands

access-list ip (326)
Time Range (148)

ip access-group

This command binds an IPv4 ACL to a port. Use the **no** form to remove the port.

Syntax

ip access-group *acl-name* **in**
[**time-range** *time-range-name*] [**counter**]

no ip access-group *acl-name* **in**

acl-name – Name of the ACL. (Maximum length: 32 characters)

in – Indicates that this list applies to ingress packets.

time-range-name - Name of the time range. (Range: 1-32 characters)

counter – Enables counter for ACL statistics.

Default Setting

None

Command Mode

Interface Configuration (Ethernet)

Command Usage

If an ACL is already bound to a port and you bind a different ACL to it, the switch will replace the old binding with the new one.

Example

```
Console(config)#int eth 1/2
Console(config-if)#ip access-group david in
Console(config-if)#
```

Related Commands

show ip access-list (331)
Time Range (148)

show ip access-group

This command shows the ports assigned to IP ACLs.

Command Mode

Privileged Exec

Example

```
Console#show ip access-group
Interface ethernet 1/2
 IP access-list david in
Console#
```

show ip access-list

This command displays the rules for configured IPv4 ACLs.

Syntax

show ip access-list {**standard** | **extended**} [*acl-name*]

standard – Specifies a standard IP ACL.

extended – Specifies an extended IP ACL.

acl-name – Name of the ACL. (Maximum length: 32 characters)

Command Mode

Privileged Exec

Example

```
Console#show ip access-list standard
IP standard access-list david:
  permit host 10.1.1.21
  permit 168.92.0.0 255.255.15.0
Console#
```

Related Commands

permit, deny (326)

IPv6 ACLs

The commands in this section configure ACLs based on IPv6 addresses, DSCP traffic class, or next header type. To configure IPv6 ACLs, first create an access list containing the required permit or deny rules, and then bind the access list to one or more ports.

Table 66: IPv6 ACL Commands

Command	Function	Mode
access-list ipv6	Creates an IPv6 ACL and enters configuration mode for standard or extended IPv6 ACLs	GC
permit, deny	Filters packets matching a specified source IPv6 address	IPv6- STD-ACL
permit, deny	Filters packets meeting the specified criteria, including source or destination IPv6 address, DSCP traffic class, or next header type	IPv6- EXT-ACL
ipv6 access-group	Binds an IPv6 ACL to a port	IC
show ipv6 access-group	Shows port assignments for IPv6 ACLs	PE
show ipv6 access-list	Displays the rules for configured IPv6 ACLs	PE

access-list ipv6

This command adds an IP access list and enters configuration mode for standard or extended IPv6 ACLs. Use the **no** form to remove the specified ACL.

Syntax

[**no**] **access-list ipv6** {**standard** | **extended**} *acl-name*

standard – Specifies an ACL that filters packets based on the source IP address.

extended – Specifies an ACL that filters packets based on the destination IP address, and other more specific criteria.

acl-name – Name of the ACL. (Maximum length: 32 characters)

Default Setting

None

Command Mode

Global Configuration

Command Usage

- When you create a new ACL or enter configuration mode for an existing ACL, use the **permit** or **deny** command to add new rules to the bottom of the list. To create an ACL, you must add at least one rule to the list.
- To remove a rule, use the **no permit** or **no deny** command followed by the exact text of a previously configured rule.

- An ACL can contain up to 64 rules.

Example

```
Console(config)#access-list ipv6 standard david
Console(config-std-ipv6-acl)#
```

Related Commands

permit, deny (Standard IPv6 ACL) (333)
permit, deny (Extended IPv6 ACL) (334)
ipv6 access-group (337)
show ipv6 access-list (338)

permit, deny (Standard IPv6 ACL)

This command adds a rule to a Standard IPv6 ACL. The rule sets a filter condition for packets emanating from the specified source. Use the **no** form to remove a rule.

Syntax

{**permit** | **deny**} {**any** | **host** *source-ipv6-address* | *source-ipv6-address/prefix-length*} [**time-range** *time-range-name*]

no {**permit** | **deny**} {**any** | **host** *source-ipv6-address* | *source-ipv6-address/prefix-length*}

any – Any source IP address.

host – Keyword followed by a specific IP address.

source-ipv6-address - An IPv6 source address or network class. The address must be formatted according to RFC 2373 "IPv6 Addressing Architecture," using 8 colon-separated 16-bit hexadecimal values. One double colon may be used in the address to indicate the appropriate number of zeros required to fill the undefined fields.

prefix-length - A decimal value indicating how many contiguous bits (from the left) of the address comprise the prefix; i.e., the network portion of the address. (Range: 0-128)

time-range-name - Name of the time range. (Range: 1-32 characters)

Default Setting

None

Command Mode

Standard IPv6 ACL

Command Usage

New rules are appended to the end of the list.

Example

This example configures one permit rule for the specific address 2009:DB9:2229::79 and another rule for the addresses with the network prefix 2009:DB9:2229:5::/64.

```
Console(config-std-ipv6-acl)#permit host 2009:DB9:2229::79
Console(config-std-ipv6-acl)#permit 2009:DB9:2229:5::/64
Console(config-std-ipv6-acl)#
```

Related Commands

access-list ipv6 (332)
Time Range (148)

permit, deny (Extended IPv6 ACL)

This command adds a rule to an Extended IPv6 ACL. The rule sets a filter condition for packets with specific source or destination IP addresses, or next header type. Use the **no** form to remove a rule.

Syntax

{**permit** | **deny**}
{**any** | **host** *source-ipv6-address* | *source-ipv6-address*[*/prefix-length*]}
{**any** | *destination-ipv6-address*[*/prefix-length*]}
[**dscp** *dscp*] [**next-header** *next-header*]
[**source-port** *sport* [*bitmask*]]
[**destination-port** *dport* [*port-bitmask*]]
[**time-range** *time-range-name*]

no {**permit** | **deny**}
{**any** | **host** *source-ipv6-address* | *source-ipv6-address*[*/prefix-length*]}
{**any** | *destination-ipv6-address*[*/prefix-length*]}
[**dscp** *dscp*] [**next-header** *next-header*]
[**source-port** *sport* [*bitmask*]]
[**destination-port** *dport* [*port-bitmask*]]

any – Any IP address (an abbreviation for the IPv6 prefix ::/0).

host – Keyword followed by a specific source IP address.

source-ipv6-address - An IPv6 source address or network class. The address must be formatted according to RFC 2373 "IPv6 Addressing Architecture," using 8 colon-separated 16-bit hexadecimal values. One double colon may be used in the address to indicate the appropriate number of zeros required to fill the undefined fields.

destination-ipv6-address - An IPv6 destination address or network class. The address must be formatted according to RFC 2373 "IPv6 Addressing Architecture," using 8 colon-separated 16-bit hexadecimal values. One double colon may be used in the address to indicate the appropriate number of zeros required to fill the undefined fields. (The switch only checks the first 128 bits of the destination address.)

prefix-length - A decimal value indicating how many contiguous bits (from the left) of the address comprise the prefix; i.e., the network portion of the address. (Range: 0-128 for source prefix, 0-128 for destination prefix)

dscp – DSCP traffic class. (Range: 0-63)

next-header – Identifies the type of header immediately following the IPv6 header. (Range: 0-255)

sport – Protocol[5] source port number. (Range: 0-65535)

dport – Protocol[4] destination port number. (Range: 0-65535)

port-bitmask – Decimal number representing the port bits to match. (Range: 0-65535)

time-range-name - Name of the time range. (Range: 1-32 characters)

Default Setting
None

Command Mode
Extended IPv6 ACL

Command Usage
- All new rules are appended to the end of the list.
- Optional internet-layer information is encoded in separate headers that may be placed between the IPv6 header and the upper-layer header in a packet. There are a small number of such extension headers, each identified by a distinct Next Header value. IPv6 supports the values defined for the IPv4 Protocol field in RFC 1700, including these commonly used headers:

0	: Hop-by-Hop Options	(RFC 2460)
6	: TCP Upper-layer Header	(RFC 1700)
17	: UDP Upper-layer Header	(RFC 1700)
43	: Routing	(RFC 2460)
44	: Fragment	(RFC 2460)
51	: Authentication	(RFC 2402)
50	: Encapsulating Security Payload	(RFC 2406)
60	: Destination Options	(RFC 2460)

Example
This example accepts any incoming packets if the destination address is 2009:DB9:2229::79/8.

```
Console(config-ext-ipv6-acl)#permit any 2009:db90:2229::79/8
Console(config-ext-ipv6-acl)#
```

5. Includes TCP and UDP.

This allows packets to any destination address when the DSCP value is 5.

```
Console(config-ext-ipv6-acl)#permit any any dscp 5
Console(config-ext-ipv6-acl)#
```

This allows any packets sent from any source to any destination when the next header is 43."

```
Console(config-ext-ipv6-acl)#permit any any next-header 43
Console(config-ext-ipv6-acl)#
```

Here is a more detailed example for setting the CPU rate limit for SNMP packets.

```
Set ACL
Console(config)#access-list ip extended snmp-acl
Console(config-ext-acl)#permit any any destination-port 161
Console(config-ext-acl)#permit any any destination-port 162
Console(config-ext-acl)#exit

Set class map
Console(config)#class-map snmp-class
Console(config-cmap)#match access-list snmp-acl
Console(config-cmap)#

Set policy map and rate-limit
Console(config)#policy-map cpu-rate-limit-policy
Console(config-pmap)#class snmp-class
Console(config-pmap-c)police flow 10000 20000 conform-action transmit
  violate-action drop
Console(config-pmap-c)exit
Console(config-pmap)#exit

Bind the service-policy to control-plane
Console(config)#control-plane
Console(config)#interface ethernet 1/1
Console(config-if)#service-policy input cpu-rate-limit-policy
Console(config-if)#
```

Related Commands

access-list ipv6 (332)
Time Range (148)

ipv6 access-group

This command binds an IPv6 ACL to a port. Use the **no** form to remove the port.

Syntax

ipv6 access-group *acl-name* **in**
[**time-range** *time-range-name*] [**counter**]

no ipv6 access-group *acl-name* **in**

acl-name – Name of the ACL. (Maximum length: 32 characters)

in – Indicates that this list applies to ingress packets.

time-range-name - Name of the time range. (Range: 1-32 characters)

counter – Enables counter for ACL statistics.

Default Setting

None

Command Mode

Interface Configuration (Ethernet)

Command Usage

If a port is already bound to an ACL and you bind it to a different ACL, the switch will replace the old binding with the new one.

Example

```
Console(config)#interface ethernet 1/2
Console(config-if)#ipv6 access-group standard david in
Console(config-if)#
```

Related Commands

show ipv6 access-list (338)
Time Range (148)

show ipv6 access-group

This command shows the ports assigned to IPv6 ACLs.

Command Mode

Privileged Exec

Example

```
Console#show ipv6 access-group
Interface ethernet 1/2
 IPv6 standard access-list david in
Console#
```

Related Commands

ipv6 access-group (337)

show ipv6 access-list

This command displays the rules for configured IPv6 ACLs.

Syntax

show ipv6 access-list {**standard** | **extended**} [*acl-name*]

standard – Specifies a standard IPv6 ACL.

extended – Specifies an extended IPv6 ACL.

acl-name – Name of the ACL. (Maximum length: 32 characters)

Command Mode

Privileged Exec

Example

```
Console#show ipv6 access-list standard
IPv6 standard access-list david:
  permit host 2009:DB9:2229::79
  permit 2009:DB9:2229:5::/64
Console#
```

Related Commands

permit, deny (Standard IPv6 ACL) (333)
permit, deny (Extended IPv6 ACL) (334)
ipv6 access-group (337)

MAC ACLs

The commands in this section configure ACLs based on hardware addresses, packet format, and Ethernet type. The ACLs can further specify optional IP and IPv6 addresses including protocol type and upper layer ports. To configure MAC ACLs, first create an access list containing the required permit or deny rules, and then bind the access list to one or more ports.

Table 67: MAC ACL Commands

Command	Function	Mode
access-list mac	Creates a MAC ACL and enters configuration mode	GC
permit, deny	Filters packets matching a specified source and destination address, packet format, and Ethernet type. They can be further specified using optional IP and IPv6 addresses including protocol type and upper layer ports.	MAC-ACL
mac access-group	Binds a MAC ACL to a port	IC
show mac access-group	Shows port assignments for MAC ACLs	PE
show mac access-list	Displays the rules for configured MAC ACLs	PE

access-list mac

This command enters MAC ACL configuration mode. Rules can be added to filter packets matching a specified MAC source or destination address (i.e., physical layer address), or Ethernet protocol type. Rules can also be used to filter packets based on IPv4/v6 addresses, including Layer 4 ports and protocol types. Use the **no** form to remove the specified ACL.

Syntax

[**no**] **access-list mac** *acl-name*

acl-name – Name of the ACL. (Maximum length: 32 characters,)

Default Setting

None

Command Mode

Global Configuration

Command Usage

- When you create a new ACL or enter configuration mode for an existing ACL, use the **permit** or **deny** command to add new rules to the bottom of the list.
- To remove a rule, use the **no permit** or **no deny** command followed by the exact text of a previously configured rule.
- An ACL can contain up to 2048 rules.

Example

```
Console(config)#access-list mac jerry
Console(config-mac-acl)#
```

Related Commands

permit, deny (339)
mac access-group (342)
show mac access-list (343)

permit, deny (MAC ACL)

This command adds a rule to a MAC ACL. The rule filters packets matching a specified MAC source or destination address (i.e., physical layer address), or Ethernet protocol type. Rules can also filter packets based on IPv4/v6 addresses, including Layer 4 ports and protocol types. Use the **no** form to remove a rule.

Syntax

{**permit** | **deny**}
{**any** | **host** *source* | *source address-bitmask*}
{**any** | **host** *destination* | *destination address-bitmask*}
[**cos** *cos cos-bitmask*] [**vid** *vid vid-bitmask*]
[**ethertype** *ethertype* [*ethertype-bitmask*]]
[**time-range** *time-range-name*]

no {**permit** | **deny**}
{**any** | **host** *source* | *source address-bitmask*}
{**any** | **host** *destination* | *destination address-bitmask*}
[**cos** *cos cos-bitmask*] [**vid** *vid vid-bitmask*]
[**ethertype** *ethertype* [*ethertype-bitmask*]]

Note: The default is for Ethernet II packets.

{**permit** | **deny**} **tagged-eth2**
{**any** | **host** *source* | *source address-bitmask*}
{**any** | **host** *destination* | *destination address-bitmask*}
[**cos** *cos cos-bitmask*] [**vid** *vid vid-bitmask*]
[**ethertype** *ethertype* [*ethertype-bitmask*]]
[**time-range** *time-range-name*]

no {**permit** | **deny**} **tagged-eth2**
{**any** | **host** *source* | *source address-bitmask*}
{**any** | **host** *destination* | *destination address-bitmask*}
[**cos** *cos cos-bitmask*] [**vid** *vid vid-bitmask*]
[**ethertype** *ethertype* [*ethertype-bitmask*]]
{**permit** | **deny**} **untagged-eth2**
{**any** | **host** *source* | *source address-bitmask*}
{**any** | **host** *destination* | *destination address-bitmask*}
[**ethertype** *ethertype* [*ethertype-bitmask*]]
[**time-range** *time-range-name*]

no {**permit** | **deny**} **untagged-eth2**
{**any** | **host** *source* | *source address-bitmask*}
{**any** | **host** *destination* | *destination address-bitmask*}
[**ethertype** *ethertype* [*ethertype-bitmask*]]
{**permit** | **deny**} **tagged-802.3**
{**any** | **host** *source* | *source address-bitmask*}
{**any** | **host** *destination* | *destination address-bitmask*}
[**cos** *cos cos-bitmask*] [**vid** *vid vid-bitmask*]
[**time-range** *time-range-name*]

no {**permit** | **deny**} **tagged-802.3**
{**any** | **host** *source* | *source address-bitmask*}
{**any** | **host** *destination* | *destination address-bitmask*}
[**cos** *cos cos-bitmask*] [**vid** *vid vid-bitmask*]

{**permit** | **deny**} **untagged-802.3**
{**any** | **host** *source* | *source address-bitmask*}
{**any** | **host** *destination* | *destination address-bitmask*}
[**time-range** *time-range-name*]

no {**permit** | **deny**} **untagged-802.3**
{**any** | **host** *source* | *source address-bitmask*}
{**any** | **host** *destination* | *destination address-bitmask*}

tagged-eth2 – Tagged Ethernet II packets.

untagged-eth2 – Untagged Ethernet II packets.

tagged-802.3 – Tagged Ethernet 802.3 packets.

untagged-802.3 – Untagged Ethernet 802.3 packets.

any – Any MAC, IPv4 or IPv6 source or destination address.

host – A specific MAC, IPv4 or IPv6 address.

source – Source MAC, IPv4 or IPv6 address.

destination – Destination MAC, IPv4 or IPv6 address.

address-bitmask[6] – Bitmask for MAC address (in hexadecimal format).

network-mask – Network mask for IP subnet. This mask identifies the host address bits used for routing to specific subnets.

prefix-length - Length of IPv6 prefix. A decimal value indicating how many contiguous bits (from the left) of the address comprise the prefix; i.e., the network portion of the address. (Range: 0-128)

cos – Class-of-Service value (Range: 0-7)

cos-bitmask[6] – Class-of-Service bitmask. (Range: 0-7)

vid – VLAN ID. (Range: 1-4094)

vid-bitmask[6] – VLAN bitmask. (Range: 1-4095)

ethertype – A specific Ethernet protocol number. (Range: 0-ffff hex)

ethertype-bitmask[6] – Protocol bitmask. (Range: 0-ffff hex)

time-range-name - Name of the time range. (Range: 1-32 characters)

Default Setting
None

Command Mode
MAC ACL

Command Usage
- New rules are added to the end of the list.
- The **ethertype** option can only be used to filter Ethernet II formatted packets.
- A detailed listing of Ethernet protocol types can be found in RFC 1060. A few of the more common types include the following:
  - 0800 - IP
  - 0806 - ARP
  - 8137 - IPX
- If an Extended IPv4 rule and MAC rule match the same packet, and these rules specify a “permit” entry and “deny” entry, the “deny” action takes precedence.

6. For all bitmasks, “1” means relevant and “0” means ignore.

Example

This rule permits packets from any source MAC address to the destination address 00-e0-29-94-34-de where the Ethernet type is 0800.

```
Console(config-mac-acl)#permit any host 00-e0-29-94-34-de ethertype 0800
Console(config-mac-acl)#
```

Related Commands

access-list mac (339)
Time Range (148)

mac access-group

This command binds a MAC ACL to a port. Use the **no** form to remove the port.

Syntax

mac access-group *acl-name* **in**
[**time-range** *time-range-name*] [**counter**]

no mac access-group *acl-name* **in**

acl-name – Name of the ACL. (Maximum length: 32 characters)

in – Indicates that this list applies to ingress packets.

time-range-name - Name of the time range. (Range: 1-32 characters)

counter – Enables counter for ACL statistics.

Default Setting

None

Command Mode

Interface Configuration (Ethernet)

Command Usage

If an ACL is already bound to a port and you bind a different ACL to it, the switch will replace the old binding with the new one.

Example

```
Console(config)#interface ethernet 1/2
Console(config-if)#mac access-group jerry in
Console(config-if)#
```

Related Commands

show mac access-list (343)
Time Range (148)

show mac access-group

This command shows the ports assigned to MAC ACLs.

Command Mode

Privileged Exec

Example

```
Console#show mac access-group
Interface ethernet 1/5
 MAC access-list M5 in
Console#
```

Related Commands

mac access-group (342)

show mac access-list

This command displays the rules for configured MAC ACLs.

Syntax

show mac access-list [*acl-name*]

acl-name – Name of the ACL. (Maximum length: 32 characters)

Command Mode

Privileged Exec

Example

```
Console#show mac access-list
MAC access-list jerry:
  permit any 00-e0-29-94-34-de ethertype 0800
Console#
```

Related Commands

permit, deny (339)
mac access-group (342)

ARP ACLs

The commands in this section configure ACLs based on the IP or MAC address contained in ARP request and reply messages. To configure ARP ACLs, first create an access list containing the required permit or deny rules, and then bind the access list to one or more VLANs using the ip arp inspection vlan command.

Table 68: ARP ACL Commands

Command	Function	Mode
access-list arp	Creates a ARP ACL and enters configuration mode	GC
permit, deny	Filters packets matching a specified source or destination address in ARP messages	ARP-ACL
show access-list arp	Displays the rules for configured ARP ACLs	PE

access-list arp

This command adds an ARP access list and enters ARP ACL configuration mode. Use the **no** form to remove the specified ACL.

Syntax

[**no**] **access-list arp** *acl-name*

acl-name – Name of the ACL. (Maximum length: 32 characters)

Default Setting

None

Command Mode

Global Configuration

Command Usage

- When you create a new ACL or enter configuration mode for an existing ACL, use the **permit** or **deny** command to add new rules to the bottom of the list. To create an ACL, you must add at least one rule to the list.
- To remove a rule, use the **no permit** or **no deny** command followed by the exact text of a previously configured rule.
- An ACL can contain up to 128 rules.

Example

```
Console(config)#access-list arp factory
Console(config-arp-acl)#
```

Related Commands

permit, deny (345)
show access-list arp (346)

permit, deny (ARP ACL)

This command adds a rule to an ARP ACL. The rule filters packets matching a specified source or destination address in ARP messages. Use the **no** form to remove a rule.

Syntax

[**no**] {**permit** | **deny**} **ip**
{**any** | **host** *source-ip* | *source-ip ip-address-bitmask*}
{**any** | **host** *destination-ip* | *destination-ip ip-address-bitmask*}
mac {**any** | **host** *source-mac* | *source-mac mac-address-bitmask*}
[**any** | **host** *destination-mac* | *destination-mac mac-address-bitmask*] [**log**]

This form indicates either request or response packets.

[**no**] {**permit** | **deny**} **request**
ip {**any** | **host** *source-ip* | *source-ip ip-address-bitmask*}
{**any** | **host** *destination-ip* | *destination-ip ip-address-bitmask*}
mac {**any** | **host** *source-mac* | *source-mac mac-address-bitmask*}
[**any** | **host** *destination-mac* | *destination-mac mac-address-bitmask*] [**log**]

[**no**] {**permit** | **deny**} **response**
ip {**any** | **host** *source-ip* | *source-ip ip-address-bitmask*}
{**any** | **host** *destination-ip* | *destination-ip ip-address-bitmask*}
mac {**any** | **host** *source-mac* | *source-mac mac-address-bitmask*}
[**any** | **host** *destination-mac* | *destination-mac mac-address-bitmask*] [**log**]

source-ip – Source IP address.

destination-ip – Destination IP address with bitmask.

ip-address-bitmask[7] – IPv4 number representing the address bits to match.

source-mac – Source MAC address.

destination-mac – Destination MAC address range with bitmask.

mac-address-bitmask[7] – Bitmask for MAC address (in hexadecimal format).

log - Logs a packet when it matches the access control entry.

Default Setting

None

Command Mode

ARP ACL

Command Usage

New rules are added to the end of the list.

7. For all bitmasks, binary “1” means relevant and “0” means ignore.

Example

This rule permits packets from any source IP and MAC address to the destination subnet address 192.168.0.0.

```
Console(config-arp-acl)#$permit response ip any 192.168.0.0 255.255.0.0 mac
  any any
Console(config-mac-acl)#
```

Related Commands

access-list arp (344)

show access-list arp

This command displays the rules for configured ARP ACLs.

Syntax

show access-list arp [*acl-name*]

acl-name – Name of the ACL. (Maximum length: 32 characters)

Command Mode

Privileged Exec

Example

```
Console#show access-list arp
ARP access-list factory:
  permit response ip any 192.168.0.0 255.255.0.0 mac any any
Console#
```

Related Commands

permit, deny (345)

ACL Information

This section describes commands used to display ACL information.

Table 69: ACL Information Commands

Command	Function	Mode
clear access-list hardware counters	Clears hit counter for rules in all ACLs, or in a specified ACL	PE
show access-group	Shows the ACLs assigned to each port	PE
show access-list	Show all ACLs and associated rules	PE

clear access-list hardware counters

This command clears the hit counter for the rules in all ACLs, or for the rules in a specified ACL.

Syntax

clear access-list hardware counters
[**direction in** [**interface** *interface*]] |
[**interface** *interface*] | [**name** *acl-name*]

in – Clears counter for ingress rules.

interface

ethernet *unit/port*

unit - Unit identifier. (Range: 1)

port - Port number. (Range: 1-52)

acl-name – Name of the ACL. (Maximum length: 32 characters)

Command Mode

Privileged Exec

Example

```
Console#clear access-list hardware counters
Console#
```

show access-group

This command shows the port assignments of ACLs.

Command Mode

Privileged Executive

Example

```
Console#show access-group
Interface ethernet 1/2
 IP access-list david
 MAC access-list jerry
Console#
```

show access-list

This command shows all ACLs and associated rules.

Syntax

show access-list
[[**arp** [*acl-name*]] |
[**ip** [**extended** [*acl-name*] | **standard** [*acl-name*]] |
[**ipv6** [**extended** [*acl-name*] | **standard** [*acl-name*]] |
[**mac** [*acl-name*]] | [**tcam-utilization**] | [**hardware counters**]]

arp – Shows ingress or egress rules for ARP ACLs.

hardware counters – Shows statistics for all ACLs.[8]

ip extended – Shows ingress or egress rules for Extended IPv4 ACLs.

ip standard – Shows ingress or egress rules for Standard IPv4 ACLs.

ipv6 extended – Shows ingress or egress rules for Extended IPv6 ACLs.

ipv6 standard – Shows ingress or egress rules for Standard IPv6 ACLs.

mac – Shows ingress or egress rules for MAC ACLs.

tcam-utilization – Shows the percentage of user configured ACL rules as a percentage of total ACL rules

acl-name – Name of the ACL. (Maximum length: 32 characters)

Command Mode

Privileged Exec

Example

```
Console#show access-list
IP standard access-list david:
  permit host 10.1.1.21
  permit 168.92.0.0 255.255.15.0
IP extended access-list bob:
  permit 10.7.1.1 255.255.255.0 any
  permit 192.168.1.0 255.255.255.0 any destination-port 80 80
  permit 192.168.1.0 255.255.255.0 any protocol tcp control-code 2 2
MAC access-list jerry:
  permit any host 00-30-29-94-34-de ethertype 800 800
IP extended access-list A6:
  deny tcp any any control-flag 2 2
  permit any any
Console#
```

8. Due to a hardware limitation, this option only displays statistics for permit rules.

11 Interface Commands

These commands are used to display or set communication parameters for an Ethernet port, aggregated link, or VLAN; or perform cable diagnostics on the specified interface.

Table 70: Interface Commands

Command	Function	Mode
Interface Configuration		
interface	Configures an interface type and enters interface configuration mode	GC
capabilities	Advertises the capabilities of a given interface for use in autonegotiation	IC
description	Adds a description to an interface configuration	IC
flowcontrol	Enables flow control on a given interface	IC
history	Configures a periodic sampling of statistics, specifying the sampling interval and number of samples	IC
media-type	Forces transceiver mode to use for SFP+ ports	IC
negotiation	Enables autonegotiation of a given interface	IC
shutdown	Disables an interface	IC
speed-duplex	Configures the speed and duplex operation of a given interface when autonegotiation is disabled	IC
clear counters	Clears statistics on an interface	PE
show interfaces brief	Displays a summary of key information, including operational status, native VLAN ID, default priority, speed/duplex mode, and port type	PE
show interfaces counters	Displays statistics for the specified interfaces	NE, PE
show interfaces history	Displays periodic sampling of statistics, including the sampling interval, number of samples, and counter values	NE, PE
show interfaces status	Displays status for the specified interface	NE, PE
show interfaces switchport	Displays the administrative and operational status of an interface	NE, PE
Transceiver Threshold Configuration		
transceiver-monitor	Sends a trap when any of the transceiver's operational values fall outside specified thresholds	IC
transceiver-threshold-auto	Uses default threshold settings obtained from the transceiver to determine when an alarm or trap message should be sent	IC
transceiver-threshold current	Sets thresholds for transceiver current which can be used to trigger an alarm or warning message	IC

Table 70: Interface Commands (Continued)

Command	Function	Mode
transceiver-threshold rx-power	Sets thresholds for the transceiver power level of the received signal which can be used to trigger an alarm or warning message	IC
transceiver-threshold temperature	Sets thresholds for the transceiver temperature which can be used to trigger an alarm or warning message	IC
transceiver-threshold tx-power	Sets thresholds for the transceiver power level of the transmitted signal which can be used to trigger an alarm or warning message	IC
transceiver-threshold voltage	Sets thresholds for the transceiver voltage which can be used to trigger an alarm or warning message	IC
show interfaces transceiver	Displays the temperature, voltage, bias current, transmit power, and receive power	PE
show interfaces transceiver-threshold	Displays the alarm/warning thresholds for temperature, voltage, bias current, transmit power, and receive power	PE
Cable Diagnostics		
test cable-diagnostics	Performs cable diagnostics on the specified port	PE
show cable-diagnostics	Shows the results of a cable diagnostics test	PE
Power Savings		
power-save	Enables power savings mode on the specified port	IC
show power-save	Shows the configuration settings for power savings	PE

Interface Configuration

interface

This command configures an interface type and enters interface configuration mode. Use the **no** form with a trunk to remove an inactive interface. Use the **no** form with a Layer 3 VLAN (normal type) to change it back to a Layer 2 interface.

Syntax

[**no**] **interface** *interface*

interface

ethernet *unit/port-list*

unit - Unit identifier. (Range: 1)

port-list - Physical port number or list of port numbers. Separate nonconsecutive port numbers with a comma and no spaces; or use a hyphen to designate a range of port numbers. (Range: 1-52)

port-channel *channel-id* (Range: 1-8)

vlan *vlan-id* (Range: 1-4094)

Default Setting

None

Command Mode
Global Configuration

Example
To specify several different ports, enter the following command:

```
Console(config)#interface ethernet 1/17-20,23
Console(config-if)#
```

capabilities

This command advertises the port capabilities of a given interface during auto-negotiation. Use the **no** form with parameters to remove an advertised capability, or the **no** form without parameters to restore the default values.

Syntax

[**no**] **capabilities** {**1000full** | **100full** | **100half** | **10full** | **10half** | **flowcontrol**}

1000full - Supports 1 Gbps full-duplex operation

100full - Supports 100 Mbps full-duplex operation

100half - Supports 100 Mbps half-duplex operation

10full - Supports 10 Mbps full-duplex operation

10half - Supports 10 Mbps half-duplex operation

flowcontrol - Supports flow control

Default Setting
1000BASE-T: 10half, 10full, 100half, 100full, 1000full
1000BASE-SX/LX/LHX/ZX (SFP+): 1000full

Command Mode
Interface Configuration (Ethernet, Port Channel)

Command Usage
- The 1000BASE-T standard does not support forced mode. Auto-negotiation should always be used to establish a connection over any 1000BASE-T port or trunk.

- When auto-negotiation is enabled with the negotiation command, the switch will negotiate the best settings for a link based on the **capabilities** command. When auto-negotiation is disabled, you must manually specify the link attributes with the speed-duplex and flowcontrol commands.

Example

The following example configures Ethernet port 5 capabilities to include 100half and 100full.

```
Console(config)#interface ethernet 1/5
Console(config-if)#capabilities 100half
Console(config-if)#capabilities 100full
Console(config-if)#capabilities flowcontrol
Console(config-if)#
```

Related Commands

negotiation (355)
speed-duplex (356)
flowcontrol (353)

description

This command adds a description to an interface. Use the **no** form to remove the description.

Syntax

description *string*

no description

string - Comment or a description to help you remember what is attached to this interface. (Range: 1-64 characters)

Default Setting

None

Command Mode

Interface Configuration (Ethernet, Port Channel)

Command Usage

The description is displayed by the show interfaces status command and in the running-configuration file. An example of the value which a network manager might store in this object is the name of the manufacturer, and the product name.

Example

The following example adds a description to port 4.

```
Console(config)#interface ethernet 1/4
Console(config-if)#description RD-SW#3
Console(config-if)#
```

flowcontrol

This command enables flow control. Use the **no** form to disable flow control.

Syntax

[**no**] **flowcontrol**

Default Setting

Disabled

Command Mode

Interface Configuration (Ethernet, Port Channel)

Command Usage

- 1000BASE-T does not support forced mode. Auto-negotiation should always be used to establish a connection over any 1000BASE-T port or trunk.
- Flow control can eliminate frame loss by "blocking" traffic from end stations or segments connected directly to the switch when its buffers fill. When enabled, back pressure is used for half-duplex operation and IEEE 802.3-2002 (formally IEEE 802.3x) for full-duplex operation.
- To force flow control on or off (with the **flowcontrol** or **no flowcontrol** command), use the **no negotiation** command to disable auto-negotiation on the selected interface.
- When using the negotiation command to enable auto-negotiation, the optimal settings will be determined by the capabilities command. To enable flow control under auto-negotiation, "flowcontrol" must be included in the capabilities list for any port

Example

The following example enables flow control on port 5.

```
Console(config)#interface ethernet 1/5
Console(config-if)#flowcontrol
Console(config-if)#no negotiation
Console(config-if)#
```

Related Commands

negotiation (355)
capabilities (351)

history

This command configures a periodic sampling of statistics, specifying the sampling interval and number of samples. Use the **no** form to remove a named entry from the sampling table.

Syntax

history *name interval buckets*

no history *name*

name - A symbolic name for this entry in the sampling table. (Range: 1-32 characters)

interval - The interval for sampling statistics. (Range: 1-1440 minutes.

buckets - The number of samples to take. (Range: 1-96)

Default Setting

15min - 15 minute interval, 96 buckets
1day - 1 day interval, 7 buckets

Command Mode

Interface Configuration (Ethernet, Port Channel)

Example

This example sets a interval of 15 minutes for sampling standard statistical values on port 1.

```
Console(config)#interface ethernet 1/1
Console(config-if)#history 15min 15 10
Console(config-if)#
```

media-type

This command forces the transceiver mode to use for SFP+ ports. Use the **no** form to restore the default mode.

Syntax

media-type {**sfp-forced** [*mode*]}

no media-type

sfp-forced - Forces transceiver mode for the SFP+ port.

mode

1000sfp - Specifies forced 1000BASE-SFP connector

100fx - Specifies forced 100BASE-FX connector

10gsfp - Specifies forced 10GBASE-SFP connector

Default Setting

SFP+ ports: None

Command Mode
Interface Configuration (Ethernet)

Command Usage
Available sfp-forced modes include:
Ports 49-52 (1000BASE SFP) support 1000sfp, 100fx

Example
This forces the switch to use the 1000sfp mode for SFP port 28.

```
Console(config)#interface ethernet 1/28
Console(config-if)#media-type sfp-forced 1000sfp
Console(config-if)#
```

negotiation

This command enables auto-negotiation for a given interface. Use the **no** form to disable auto-negotiation.

Syntax

[**no**] **negotiation**

Default Setting
Enabled

Command Mode
Interface Configuration (Ethernet, Port Channel)

Command Usage
- 1000BASE-T does not support forced mode. Auto-negotiation should always be used to establish a connection over any 1000BASE-T port or trunk.
- When auto-negotiation is enabled the switch will negotiate the best settings for a link based on the capabilities command. When auto-negotiation is disabled, you must manually specify the link attributes with the speed-duplex and flowcontrol commands.
- If auto-negotiation is disabled, auto-MDI/MDI-X pin signal configuration will also be disabled for the RJ-45 ports.

Example
The following example configures port 10 to use auto-negotiation.

```
Console(config)#interface ethernet 1/10
Console(config-if)#negotiation
Console(config-if)#
```

Related Commands
capabilities (351)
speed-duplex (356)

shutdown

This command disables an interface. To restart a disabled interface, use the **no** form.

Syntax

[**no**] **shutdown**

Default Setting
All interfaces are enabled.

Command Mode
Interface Configuration (Ethernet, Port Channel)

Command Usage
This command allows you to disable a port due to abnormal behavior (e.g., excessive collisions), and then re-enable it after the problem has been resolved. You may also want to disable a port for security reasons.

Example
The following example disables port 5.

```
Console(config)#interface ethernet 1/5
Console(config-if)#shutdown
Console(config-if)#
```

speed-duplex

This command configures the speed and duplex mode of a given interface when auto-negotiation is disabled. Use the **no** form to restore the default.

Syntax

speed-duplex {**100full** | **100half** | **10full** | **10half**}

no speed-duplex

100full - Forces 100 Mbps full-duplex operation

100half - Forces 100 Mbps half-duplex operation

10full - Forces 10 Mbps full-duplex operation

10half - Forces 10 Mbps half-duplex operation

Default Setting
- Auto-negotiation is enabled by default.

- When auto-negotiation is disabled, the default speed-duplex setting is **100full** for 1000BASE-T ports.

Command Mode
Interface Configuration (Ethernet, Port Channel)

Command Usage
- The 1000BASE-T standard does not support forced mode. Auto-negotiation should always be used to establish a connection over any 1000BASE-T port or trunk. If not used, the success of the link process cannot be guaranteed when connecting to other types of switches.

- To force operation to the speed and duplex mode specified in a **speed-duplex** command, use the no negotiation command to disable auto-negotiation on the selected interface.

- When using the negotiation command to enable auto-negotiation, the optimal settings will be determined by the capabilities command. To set the speed/duplex mode under auto-negotiation, the required mode must be specified in the capabilities list for an interface.

Example
The following example configures port 5 to 100 Mbps, half-duplex operation.

```
Console(config)#interface ethernet 1/5
Console(config-if)#speed-duplex 100half
Console(config-if)#no negotiation
Console(config-if)#
```

Related Commands
negotiation (355)
capabilities (351)

clear counters

This command clears statistics on an interface.

Syntax

clear counters *interface*

interface

ethernet *unit/port*

unit - Unit identifier. (Range: 1)

port - Port number. (Range: 1-52)

port-channel *channel-id* (Range: 1-8)

Default Setting
None

Command Mode
Privileged Exec

Command Usage
Statistics are only initialized for a power reset. This command sets the base value for displayed statistics to zero for the current management session. However, if you log out and back into the management interface, the statistics displayed will show the absolute value accumulated since the last power reset.

Example
The following example clears statistics on port 5.

```
Console#clear counters ethernet 1/5
Console#
```

show interfaces brief

This command displays a summary of key information, including operational status, native VLAN ID, default priority, speed/duplex mode, and port type for all ports.

Command Mode
Privileged Exec

Command Usage
- If an SFP transceiver is inserted in a port, the Type field will show the SFP type as interpreted from Ethernet Compliance Codes (Data Byte 6 in Address A0h). The Ethernet Compliance Code is a bitmap value, of which one bit is supposedly turned on. However, if the read-out is not recognizable (e.g., 2 or more bits on, or all 0s), the Type field just displays the raw data (hexadecimal value).

- The Type field will always display “NA” for a trunk entry because a trunk allows for mixed port types such as 1000BASE-T and 1000BASE SFP.

Example

```
Console#show interfaces brief
Interface Name              Status    PVID Pri Speed/Duplex  Type         Trunk
--------- ----------------- --------- ---- --- ------------- ------------ -----
Eth 1/ 1                    Down         1   0 Auto          1000BASE-T   None
Eth 1/ 2                    Down         1   0 Auto          1000BASE-T   None
Eth 1/ 3                    Down         1   0 Auto          1000BASE-T   None
Eth 1/ 4                    Down         1   0 Auto          1000BASE-T   None
Eth 1/ 5                    Down         1   0 Auto          1000BASE-T   None
Eth 1/ 6                    Down         1   0 Auto          1000BASE-T   None
⋮
```

show interfaces counters

This command displays interface statistics.

Syntax

show interfaces counters [*interface*]

interface

ethernet *unit/port*

unit - Unit identifier. (Range: 1)

port - Port number. (Range: 1-52)

port-channel *channel-id* (Range: 1-8)

Default Setting

Shows the counters for all interfaces.

Command Mode

Normal Exec, Privileged Exec

Command Usage

If no interface is specified, information on all interfaces is displayed.

Example

```
Console#show interfaces counters ethernet 1/1
Ethernet 1/ 1
 ===== IF table Stats =====
                 2166458 Octets Input
                14734059 Octets Output
                   14707 Unicast Input
                   19806 Unicast Output
                       0 Discard Input
                       0 Discard Output
                       0 Error Input
 ===== Extended Iftable Stats =====
                      23 Multi-cast Input
                    5525 Multi-cast Output
                     170 Broadcast Input
                      11 Broadcast Output
 ===== Ether-like Stats =====
                       0 FCS Errors
                       0 Single Collision Frames
                       0 Multiple Collision Frames
                       0 Deferred Transmissions
                       0 Late Collisions
                       0 Excessive Collisions
                       0 Internal Mac Transmit Errors
                       0 Frames Too Long
                       0 Symbol Errors
                       0 Pause Frames Input
                       0 Pause Frames Output
 ===== RMON Stats =====
                       0 Drop Events
                16900558 Octets
                   40243 Packets
                     170 Broadcast PKTS
                      23 Multi-cast PKTS
                       0 Undersize PKTS
```

```
                        0 Oversize PKTS
                        0 Fragments
                        0 Jabbers
                        0 CRC Align Errors
                        0 Collisions
                     5271 Packet Size <= 64 Octets
                     3589 Packet Size 65 to 127 Octets
                      222 Packet Size 128 to 255 Octets
                      313 Packet Size 256 to 511 Octets
                      190 Packet Size 512 to 1023 Octets
                      444 Packet Size 1024 to 1518 Octets
 ===== Port Utilization =====
                      111 Octets Input in kbits per second
                        0 Packets Input per second
                     0.00 % Input Utilization
                      606 Octets Output in kbits per second
                        1 Packets Output per second
                     0.00 % Output Utilization
Console#
```

Table 71: show interfaces counters - display description

Parameter	Description
IF Table Stats	
Octets Input	The total number of octets received on the interface, including framing characters.
Octets Output	The total number of octets transmitted out of the interface, including framing characters.
Unicast Input	The number of subnetwork-unicast packets delivered to a higher-layer protocol.
Unicast Output	The total number of packets that higher-level protocols requested be transmitted to a subnetwork-unicast address, including those that were discarded or not sent.
Discard Input	The number of inbound packets which were chosen to be discarded even though no errors had been detected to prevent their being deliverable to a higher-layer protocol. One possible reason for discarding such a packet could be to free up buffer space.
Discard Output	The number of outbound packets which were chosen to be discarded even though no errors had been detected to prevent their being transmitted. One possible reason for discarding such a packet could be to free up buffer space.
Error Input	The number of inbound packets that contained errors preventing them from being deliverable to a higher-layer protocol.
Extended IF Table Stats	
Multicast Input	The number of packets, delivered by this sub-layer to a higher (sub-)layer, which were addressed to a multicast address at this sub-layer.
Multicast Output	The total number of packets that higher-level protocols requested be transmitted, and which were addressed to a multicast address at this sub-layer, including those that were discarded or not sent.
Broadcast Input	The number of packets, delivered by this sub-layer to a higher (sub-)layer, which were addressed to a broadcast address at this sub-layer.
Broadcast Output	The total number of packets that higher-level protocols requested be transmitted, and which were addressed to a broadcast address at this sub-layer, including those that were discarded or not sent.

Table 71: show interfaces counters - display description (Continued)

Parameter	Description
Etherlike Statistics	
FCS Errors	A count of frames received on a particular interface that are an integral number of octets in length but do not pass the FCS check. This count does not include frames received with frame-too-long or frame-too-short error.
Single Collision Frames	The number of successfully transmitted frames for which transmission is inhibited by exactly one collision.
Multiple Collision Frames	A count of successfully transmitted frames for which transmission is inhibited by more than one collision.
Deferred Transmissions	A count of frames for which the first transmission attempt on a particular interface is delayed because the medium was busy.
Late Collisions	The number of times that a collision is detected later than 512 bit-times into the transmission of a packet.
Excessive Collisions	A count of frames for which transmission on a particular interface fails due to excessive collisions. This counter does not increment when the interface is operating in full-duplex mode.
Internal MAC Transmit Errors	A count of frames for which transmission on a particular interface fails due to an internal MAC sublayer transmit error.
Frames Too Long	A count of frames received on a particular interface that exceed the maximum permitted frame size.
Symbol Errors	For an interface operating at 100 Mb/s, the number of times there was an invalid data symbol when a valid carrier was present. For an interface operating in half-duplex mode at 1000 Mb/s, the number of times the receiving media is non-idle (a carrier event) for a period of time equal to or greater than slotTime, and during which there was at least one occurrence of an event that causes the PHY to indicate 'Data reception error' or 'carrier extend error' on the GMII. For an interface operating in full-duplex mode at 1000 Mb/s, the number of times the receiving media is non-idle (a carrier event) for a period of time equal to or greater than minFrameSize, and during which there was at least one occurrence of an event that causes the PHY to indicate 'Data reception error' on the GMII
RMON Statistics	
Octets	Total number of octets of data received on the network. This statistic can be used as a reasonable indication of Ethernet utilization.
Packets	The total number of packets (bad, broadcast and multicast) received.
Broadcast Packets	The total number of good packets received that were directed to the broadcast address. Note that this does not include multicast packets.
Multicast Packets	The total number of good packets received that were directed to this multicast address.
Undersize Packets	The total number of packets received that were less than 64 octets long (excluding framing bits, but including FCS octets) and were otherwise well formed.
Oversize Packets	The total number of packets received that were longer than 1518 octets (excluding framing bits, but including FCS octets) and were otherwise well formed.

Table 71: show interfaces counters - display description (Continued)

Parameter	Description
Fragments	The total number of frames received that were less than 64 octets in length (excluding framing bits, but including FCS octets) and had either an FCS or alignment error.
Jabbers	The total number of frames received that were longer than 1518 octets (excluding framing bits, but including FCS octets), and had either an FCS or alignment error.
CRC Align Errors	
Collisions	The best estimate of the total number of collisions on this Ethernet segment.
64 Octets	The total number of packets (including bad packets) received and transmitted that were less than 64 octets in length (excluding framing bits but including FCS octets).
65-127 Octets 128-255 Octets 256-511 Octets 512-1023 Octets 1024-1518 Octets	The total number of packets (including bad packets) received and transmitted where the number of octets fall within the specified range (excluding framing bits but including FCS octets).
Utilization Statistics	
Octets input per second	Number of octets entering this interface in kbits per second.
Packets input per second	Number of packets entering this interface in packets per second.
Input utilization	The input utilization rate for this interface.
Octets output per second	Number of octets leaving this interface in kbits per second.
Packets output per second	Number of packets leaving this interface in packets per second.
Output utilization	The output utilization rate for this interface.

show interfaces history

This command displays periodic sampling of statistics, including the sampling interval, number of samples, and counter values.

Syntax

show interfaces history [*interface* [*name* [**current** | **previous** *index count*] [**input** | **output**]]]

interface

ethernet *unit/port*

unit - Unit identifier. (Range: 1)

port - Port number. (Range: 1-52)

port-channel *channel-id* (Range: 1-8)

vlan *vlan-id* (Range: 1-4094)

name - Name of sample as defined in the history command. (Range: 1-32 characters)

current - Statistics recorded in current interval.

previous - Statistics recorded in previous intervals.

index - An index into the buckets containing previous samples. (Range: 1-96)

count - The number of historical samples to display. (Range: 1-96)

input - Ingress traffic.

output - Egress traffic.

Default Setting

Shows the historical settings and status for all interfaces.

Command Mode

Normal Exec, Privileged Exec

Command Usage

If no interface is specified, information on all interfaces is displayed.

Example

```
Console#show interfaces history ethernet 1/1 15min
Interface         : Eth 1/ 1
Name              : 15min
Interval          : 900 second(s)
Buckets Requested : 96
Buckets Granted   : 1
Status            : Active

Current Entries

 Start Time   %      Octets Input    Unicast       Multicast     Broadcast
 ------------ ------ --------------- ------------- ------------- -------------
 00d 00:15:04   0.00           72675           524            35            41

              Discards      Errors
              ------------- -------------
                         41             0

              %      Octets Output   Unicast       Multicast     Broadcast
             ------ --------------- ------------- ------------- -------------
               0.00          513760           653           336             0

              Discards
              -------------
                           0

Previous Entries

 Start Time   %      Octets Input    Unicast       Multicast     Broadcast
 ------------ ------ --------------- ------------- ------------- -------------
 00d 00:00:03   0.66        80758067        106273        619717         69176

 Start Time   Discards      Errors
 ------------ ------------- -------------
 00d 00:00:03         69176             2

 Start Time   %      Octets Output   Unicast       Multicast     Broadcast
 ------------ ------ --------------- ------------- ------------- -------------
 00d 00:00:03   0.00          677855           705           445            14
```

```
 Start Time   Discards
 ----------- -------------
 00d 00:00:03             0
Console#
```

show interfaces status

This command displays the status for an interface.

Syntax

show interfaces status [*interface*]

interface

ethernet *unit/port*

unit - Unit identifier. (Range: 1)

port - Port number. (Range: 1-52)

port-channel *channel-id* (Range: 1-8)

vlan *vlan-id* (Range: 1-4094)

Default Setting

Shows the status for all interfaces.

Command Mode

Normal Exec, Privileged Exec

Command Usage

If no interface is specified, information on all interfaces is displayed.

Example

```
Console#show interfaces status ethernet 1/1
Information of Eth 1/1
 Basic Information:
  Port Type              : 1000BASE-T
  MAC Address            : 00-E0-0C-00-00-FE
 Configuration:
  Name                   :
  Port Admin             : Up
  Speed-duplex           : Auto
  Capabilities           : 10half, 10full, 100half, 100full, 1000full
  Broadcast Storm        : Enabled
  Broadcast Storm Limit  : 500 packets/second
  Multicast Storm        : Disabled
  Multicast Storm Limit  : 500 packets/second
  Unknown Unicast Storm       : Disabled
  Unknown Unicast Storm Limit : 500 packets/second
  Flow Control           : Disabled
  LACP                   : Disabled
  MAC Learning           : Enabled
  Link-up-down Trap      : Enabled
 Current Status:
  Link Status            : Up
  Port Operation Status  : Up
```

```
  Operation Speed-duplex : 100full
  Up Time                : 0w 0d 1h 11m 2s (4262 seconds)
  Flow Control Type      : None
  Max Frame Size         : 1518 bytes (1522 bytes for tagged frames)
  MAC Learning Status    : Enabled
Console#
```

show interfaces switchport

This command displays the administrative and operational status of the specified interfaces.

Syntax

show interfaces switchport [*interface*]

interface

ethernet *unit/port*

unit - Unit identifier. (Range: 1)

port - Port number. (Range: 1-52)

port-channel *channel-id* (Range: 1-8)

Default Setting

Shows all interfaces.

Command Mode

Normal Exec, Privileged Exec

Command Usage

If no interface is specified, information on all interfaces is displayed.

Example

This example shows the configuration setting for port 1.

```
Console#show interfaces switchport ethernet 1/1
Information of Eth 1/1
 Broadcast Threshold           : Enabled, 500 packets/second
 Multicast Threshold           : Disabled
 Unknown Unicast Threshold     : Disabled
 LACP Status                   : Disabled
 Ingress Rate Limit            : Disabled, 1000M bits per second
 Egress Rate Limit             : Disabled, 1000M bits per second
 VLAN Membership Mode          : Hybrid
 Ingress Rule                  : Disabled
 Acceptable Frame Type         : All frames
 Native VLAN                   : 1
 Priority for Untagged Traffic : 0
 Allowed VLAN                  :     1(u)
 802.1Q Tunnel Status          : Disabled
 802.1Q Tunnel Mode            : Normal
 802.1Q Tunnel TPID            : 8100 (Hex)
Console#
```

Table 72: show interfaces switchport - display description

Field	Description
Broadcast Threshold	Shows if broadcast storm suppression is enabled or disabled; if enabled it also shows the threshold level (page 405).
Multicast Threshold	Shows if multicast storm suppression is enabled or disabled; if enabled it also shows the threshold level (page 405).
Unknown Unicast Threshold	Shows if unknown unicast storm suppression is enabled or disabled; if enabled it also shows the threshold level (page 405).
LACP Status	Shows if Link Aggregation Control Protocol has been enabled or disabled (page 383).
Ingress/Egress Rate Limit	Shows if rate limiting is enabled, and the current rate limit (page 1023).
VLAN Membership Mode	Indicates membership mode as Trunk or Hybrid (page 455).
Ingress Rule	Shows if ingress filtering is enabled or disabled (page 454).
Acceptable Frame Type	Shows if acceptable VLAN frames include all types or tagged frames only (page 452).
Native VLAN	Indicates the default Port VLAN ID (page 456).
Priority for Untagged Traffic	Indicates the default priority for untagged frames (page 514).
Allowed VLAN	Shows the VLANs this interface has joined, where "(u)" indicates untagged and "(t)" indicates tagged (page 453).
802.1Q-tunnel Status	Shows if 802.1Q tunnel is enabled on this interface (page 459).
802.1Q-tunnel Mode	Shows the tunnel mode as Normal, 802.1Q Tunnel or 802.1Q Tunnel Uplink (page 460).
802.1Q-tunnel TPID	Shows the Tag Protocol Identifier used for learning and switching packets (page 463).

Transceiver Threshold Configuration

transceiver-monitor

This command sends a trap when any of the transceiver's operational values fall outside of specified thresholds. Use the **no** form to disable trap messages.

Syntax

transceiver-monitor

Default Setting

Disabled

Command Mode

Interface Configuration (SFP+ Ports)

Example

```
Console(config)interface ethernet 1/1
Console(config-if)#transceiver-monitor
Console#
```

transceiver-threshold-auto

This command uses default threshold settings obtained from the transceiver to determine when an alarm or warning message should be sent. Use the **no** form to disable this feature.

Syntax

transceiver-threshold-auto

Default Setting

Enabled

Command Mode

Interface Configuration (SFP+ Ports)

Example

```
Console(config)interface ethernet 1/1
Console(config-if)#transceiver-threshold-auto
Console#
```

transceiver-threshold current

This command sets thresholds for transceiver current which can be used to trigger an alarm or warning message.

Syntax

transceiver-threshold current {**high-alarm** | **high-warning** | **low-alarm** | **low-warning**} *threshold-value*

high-alarm – Sets the high current threshold for an alarm message.

high-warning – Sets the high current threshold for a warning message.

low-alarm – Sets the low current threshold for an alarm message.

low-warning – Sets the low current threshold for a warning message.

threshold-value – The threshold of the transceiver current.
(Range: 0-13100 in units of 0.01 mA)

Default Setting

High Alarm: 100 mA
HIgh Warning: 90 mA
Low Alarm: 6 mA
Low Warning: 7 mA

Command Mode

Interface Configuration (SFP+ Ports)

Command Usage

- If trap messages are enabled with the transceiver-monitor command, and a high-threshold alarm or warning message is sent if the current value is greater than or equal to the threshold, and the last sample value was less than the threshold. After a rising event has been generated, another such event will not be generated until the sampled value has fallen below the high threshold and reaches the low threshold.

- If trap messages are enabled with the transceiver-monitor command, and a low-threshold alarm or warning message is sent if the current value is less than or equal to the threshold, and the last sample value was greater than the threshold. After a falling event has been generated, another such event will not be generated until the sampled value has risen above the low threshold and reaches the high threshold.

- Threshold events are triggered as described above to avoid a hysteresis effect which would continuously trigger event messages if the power level were to fluctuate just above and below either the high threshold or the low threshold.

- Trap messages enabled by the transceiver-monitor command are sent to any management station configured by the snmp-server host command.

Example

The following example sets alarm thresholds for the transceiver current at port 1.

```
Console(config)interface ethernet 1/1
Console(config-if)#transceiver-threshold current low-alarm 100
Console(config-if)#transceiver-threshold rx-power high-alarm 700
Console#
```

transceiver-threshold rx-power

This command sets thresholds for the transceiver power level of the received signal which can be used to trigger an alarm or warning message.

Syntax

transceiver-threshold rx-power {**high-alarm** | **high-warning** | **low-alarm** | **low-warning**} *threshold-value*

high-alarm – Sets the high power threshold for an alarm message.

high-warning – Sets the high power threshold for a warning message.

low-alarm – Sets the low power threshold for an alarm message.

low-warning – Sets the low power threshold for a warning message.

threshold-value – The power threshold of the received signal.
(Range: -4000 - 820 in units of 0.01 dBm)

Default Setting

High Alarm: -3.00 dBm
HIgh Warning: -3.50 dBm
Low Alarm: -21.50 dBm
Low Warning: -21.00 dBm

Command Mode

Interface Configuration (SFP+ Ports)

Command Usage

- The threshold value is the power ratio in decibels (dB) of the measured power referenced to one milliwatt (mW).
- Refer to the Command Usage section under the transceiver-threshold current command for more information on configuring transceiver thresholds.
- Trap messages enabled by the transceiver-monitor command are sent to any management station configured by the snmp-server host command.

Example

The following example sets alarm thresholds for the signal power received at port 1.

```
Console(config)interface ethernet 1/1
Console(config-if)#transceiver-threshold rx-power low-alarm -21
Console(config-if)#transceiver-threshold rx-power high-alarm -3
Console#
```

transceiver-threshold temperature

This command sets thresholds for the transceiver temperature which can be used to trigger an alarm or warning message.

Syntax

transceiver-threshold temperature {**high-alarm** | **high-warning** | **low-alarm** | **low-warning**} *threshold-value*

high-alarm – Sets the high temperature threshold for an alarm message.

high-warning – Sets the high temperature threshold for a warning message.

low-alarm – Sets the low temperature threshold for an alarm message.

low-warning – Sets the low temperature threshold for a warning message.

threshold-value – The threshold of the transceiver temperature. (Range: -12800 - 12800 in units of 0.01 Celsius)

Default Setting

High Alarm: 75.00 °C
HIgh Warning: 70.00 °C
Low Alarm: -123.00 °C
Low Warning: 0.00 °C

Command Mode

Interface Configuration (SFP+ Ports)

Command Usage

- Refer to the Command Usage section under the transceiver-threshold current command for more information on configuring transceiver thresholds.
- Trap messages enabled by the transceiver-monitor command are sent to any management station configured by the snmp-server host command.

Example

The following example sets alarm thresholds for the transceiver temperature at port 1.

```
Console(config)interface ethernet 1/1
Console(config-if)#transceiver-threshold temperature low-alarm 97
Console(config-if)#transceiver-threshold temperature high-alarm -83
Console#
```

transceiver-threshold tx-power

This command sets thresholds for the transceiver power level of the transmitted signal which can be used to trigger an alarm or warning message.

Syntax

transceiver-threshold tx-power {**high-alarm** | **high-warning** | **low-alarm** | **low-warning**} *threshold-value*

high-alarm – Sets the high power threshold for an alarm message.

high-warning – Sets the high power threshold for a warning message.

low-alarm – Sets the low power threshold for an alarm message.

low-warning – Sets the low power threshold for a warning message.

threshold-value – The power threshold of the transmitted signal. (Range: -4000 - 820 in units of 0.01 dBm)

Default Setting

High Alarm: -9.00 dBm
HIgh Warning: -9.50 dBm
Low Alarm: -12.00 dBm
Low Warning: -11.50 dBm

Command Mode
Interface Configuration (SFP+ Ports)

Command Usage
- The threshold value is the power ratio in decibels (dB) of the measured power referenced to one milliwatt (mW).
- Refer to the Command Usage section under the transceiver-threshold current command for more information on configuring transceiver thresholds.
- Trap messages enabled by the transceiver-monitor command are sent to any management station configured by the snmp-server host command.

Example
The following example sets alarm thresholds for the signal power transmitted at port 1.

```
Console(config)interface ethernet 1/1
Console(config-if)#transceiver-threshold tx-power low-alarm 8
Console(config-if)#transceiver-threshold tx-power high-alarm -3
Console#
```

transceiver-threshold voltage

This command sets thresholds for the transceiver voltage which can be used to trigger an alarm or warning message.

Syntax

transceiver-threshold voltage {**high-alarm** | **high-warning** | **low-alarm** | **low-warning**} *threshold-value*

high-alarm – Sets the high voltage threshold for an alarm message.

high-warning – Sets the high voltage threshold for a warning message.

low-alarm – Sets the low voltage threshold for an alarm message.

low-warning – Sets the low voltage threshold for a warning message.

threshold-value – The threshold of the transceiver voltage.
(Range: 0-655 in units of 0.01 Volt)

Default Setting
High Alarm: 3.50 Volts
HIgh Warning: 3.45 Volts
Low Alarm: 3.10 Volts
Low Warning: 3.15 Volts

Command Mode
Interface Configuration (SFP+ Ports)

Command Usage

- Refer to the Command Usage section under the transceiver-threshold current command for more information on configuring transceiver thresholds.
- Trap messages enabled by the transceiver-monitor command are sent to any management station configured by the snmp-server host command.

Example

The following example sets alarm thresholds for the transceiver voltage at port 1.

```
Console(config)interface ethernet 1/1
Console(config-if)#transceiver-threshold voltage low-alarm 4
Console(config-if)#transceiver-threshold voltage high-alarm 2
Console#
```

show interfaces transceiver

This command displays identifying information for the specified transceiver, including connector type and vendor-related parameters, as well as the temperature, voltage, bias current, transmit power, and receive power.

Syntax

show interfaces transceiver [*interface*]

interface

ethernet *unit*/*port*

unit - Unit identifier. (Range: 1)

port - Port number. (Range: 49-52)

Default Setting

Shows all SFP interfaces.

Command Mode

Privileged Exec

Command Usage

The switch can display diagnostic information for SFP modules which support the SFF-8472 Specification for Diagnostic Monitoring Interface for Optical Transceivers. This information allows administrators to remotely diagnose problems with optical devices. This feature, referred to as Digital Diagnostic Monitoring (DDM) in the command display, provides information on transceiver parameters including temperature, supply voltage, laser bias current, laser power, and received optical power, and related alarm thresholds.

Example

```
Console#show interfaces transceiver ethernet 1/28
Information of Eth 1/49
 Connector Type        : LC
 Fiber Type            : [0x00]
```

```
 Eth Compliance Codes  : 1000BASE-ZX
 Baud Rate             : 1300 MBd
 Vendor OUI            : 00-00-5F
 Vendor Name           : SumitomoElectric
 Vendor PN             : SCP6G94-FN-BWH
 Vendor Rev            : Z
 Vendor SN             : SE08T712Z00006
 Date Code             : 10-09-14
 DDM Info
   Temperature         : 35.64 degree C
   Vcc                 : 3.25 V
   Bias Current        : 12.13 mA
   TX Power            : 2.36 dBm
   RX Power            : -24.20 dBm
 DDM Thresholds
                           Low Alarm   Low Warning  High Warning    High Alarm
   -----------           ------------  ------------  ------------  ------------
   Temperature(Celsius)        -45.00        -40.00         85.00         90.00
   Voltage(Volts)                2.90          3.00          3.60          3.70
   Current(mA)                   1.00          3.00         50.00         60.00
   TxPower(dBm)                -11.50        -10.50         -2.00         -1.00
   RxPower(dBm)                -23.98        -23.01         -1.00          0.00
Console#
```

show interfaces transceiver-threshold

This command Displays the alarm/warning thresholds for temperature, voltage, bias current, transmit power, and receive power. Syntax

Syntax

show interfaces transceiver-threshold [*interface*]

interface

ethernet *unit/port*

unit - Unit identifier. (Range: 1)

port - Port number. (Range: 49-52)

Default Setting

Shows all SFP interfaces.

Command Mode

Privileged Exec

Command Usage

- The switch can display diagnostic information for SFP modules which support the SFF-8472 Specification for Diagnostic Monitoring Interface for Optical Transceivers. This information allows administrators to remotely diagnose problems with optical devices. This feature, referred to as Digital Diagnostic Monitoring (DDM) in the command display, provides information on transceiver parameters including temperature, supply voltage, laser bias current, laser power, received optical power, and related alarm thresholds.

- The DDM thresholds displayed by this command only apply to ports which have a DDM-compliant transceiver inserted.

Example

```
Console#show interfaces transceiver-threshold ethernet 1/25
Information of Eth 1/25
 DDM Thresholds
 Transceiver-monitor        : Disabled
 Transceiver-threshold-auto : Enabled
                            Low Alarm   Low Warning  High Warning    High Alarm
   -----------            ------------  ------------  ------------  ------------
   Temperature(Celsius)       -123.00         0.00         70.00         75.00
   Voltage(Volts)                3.10         3.15          3.45          3.50
   Current(mA)                   6.00         7.00         90.00        100.00
   TxPower(dBm)                 -12.00       -11.50         -9.50         -9.00
   RxPower(dBm)                 -21.50       -21.00         -3.50         -3.00
Console#
```

Cable Diagnostics

test cable-diagnostics

This command performs cable diagnostics on the specified port to diagnose any cable faults (short, open, etc.) and report the cable length.

Syntax

test cable-diagnostics dsp interface *interface*

interface

ethernet *unit/port*

unit - Unit identifier. (Range: 1)

port - Port number. (Range: 1-48)

Command Mode

Privileged Exec

Command Usage

- Cable diagnostics are performed using Digital Signal Processing (DSP) test method when the port link-up speed is 1 Gbps. DSP analyses the cable by sending a pulsed signal into the cable, and then examining the reflection of that pulse. If the port link-up speed is not 1 Gbps, then Time Domain Reflectometry (TDR) test method is used. TDR also detects a cable fault by sending a signal through the cable and reading the signal that is reflected back. However, note that TDR can only determine if a link is valid or faulty.
- This cable test is only accurate for Ethernet cables 7 - 100 meters long.
- The test takes approximately 5 seconds. Use the show cable-diagnostics command to display the results of the test, including common cable failures, as well as the status and approximate length of each cable pair.
- Ports are linked down while running cable diagnostics.

- To ensure more accurate measurement of the length to a fault, first disable power-saving mode (using the no power-save command) on the link partner before running cable diagnostics.

Example

```
Console#test cable-diagnostics interface ethernet 1/24
Console#
```

show cable-diagnostics

This command shows the results of a cable diagnostics test.

Syntax

show cable-diagnostics dsp interface [*interface*]

interface

ethernet *unit*/*port*

unit - Unit identifier. (Range: 1)

port - Port number. (Range: 1-48)

Command Mode

Privileged Exec

Command Usage

- The results include common cable failures, as well as the status and approximate distance to a fault, or the approximate cable length if no fault is found.
- For link-down ports, the reported distance to a fault is accurate to within +/- 2 meters. For link-up ports, the accuracy is +/- 10 meters.
- Potential conditions which may be listed by the diagnostics are shown by the legend in the following example. Additional information is provided for the following test results.
  - OK: Correctly terminated pair
  - ON: Open pair, no link partner
  - IE (Impedance mismatch): Terminating impedance is not in the reference range.
  - NS (Not Supported): This message is displayed for any Gigabit Ethernet ports linked up at a speed lower than 1000 Mbps.
  - UN: Unknown Error

Example

```
Console#show cable-diagnostics interface ethernet 1/24
Cable Diagnostics on interface Ethernet 1/1:
 Cable Open with accuracy 0 meters.
   Pair A Open, length 2 meters
```

```
   Pair B Open, length 2 meters
   Pair C Short, length 0 meters
   Pair D Short, length 0 meters
   Last Update On 2011-02-16 02:32:56
Console#
```

Power Savings

power-save

This command enables power savings mode on the specified port. Use the **no** form to disable this feature.

Syntax

[**no**] **power-save**

Default Setting

Enabled

Command Mode

Interface Configuration (Ethernet ports 1-48)

Command Usage

- IEEE 802.3 defines the Ethernet standard and subsequent power requirements based on cable connections operating at 100 meters. Enabling power saving mode can reduce power used for cable lengths of 60 meters or less, with more significant reduction for cables of 20 meters or less, and continue to ensure signal integrity.
- Power saving mode only applies to the Gigabit Ethernet ports using copper media.
- Power savings can be enabled on Gigabit Ethernet RJ-45 ports.
- The power-saving methods provided by this switch include:
  - Power saving when there is no link partner:

    Under normal operation, the switch continuously auto-negotiates to find a link partner, keeping the MAC interface powered up even if no link connection exists. When using power-savings mode, the switch checks for energy on the circuit to determine if there is a link partner. If none is detected, the switch automatically turns off the transmitter, and most of the receive circuitry (entering Sleep Mode). In this mode, the low-power energy-detection circuit continuously checks for energy on the cable. If none is detected, the MAC interface is also powered down to save additional energy. If energy is detected, the switch immediately turns on both the transmitter and receiver functions, and powers up the MAC interface.

- Power saving when there is a link partner:

  Traditional Ethernet connections typically operate with enough power to support at least 100 meters of cable even though average network cable length is shorter. When cable length is shorter, power consumption can be reduced since signal attenuation is proportional to cable length. When power-savings mode is enabled, the switch analyzes cable length to determine whether or not it can reduce the signal amplitude used on a particular link.

Note: Power savings can only be implemented on Gigabit Ethernet ports using twisted-pair cabling. Power-savings mode on a active link only works when connection speed is 1 Gbps, and line length is less than 60 meters.

Example

```
Console(config)#interface ethernet 1/24
Console(config-if)#power-save
Console(config-if)#
```

show power-save

This command shows the configuration settings for power savings.

Syntax

show power-save [**interface** *interface*]

interface

ethernet *unit/port*

unit - Unit identifier. (Range: 1)

port - Port number. (Range: 1-48)

Command Mode

Privileged Exec

Example

```
Console#show power-save interface ethernet 1/24
Power Saving Status:
 Ethernet 1/24 : Enabled
Console#
```

12 Link Aggregation Commands

Ports can be statically grouped into an aggregate link (i.e., trunk) to increase the bandwidth of a network connection or to ensure fault recovery. Or you can use the Link Aggregation Control Protocol (LACP) to automatically negotiate a trunk link between this switch and another network device. For static trunks, the switches have to comply with the Cisco EtherChannel standard. For dynamic trunks, the switches have to comply with LACP. This switch supports up to 16 trunks. For example, a trunk consisting of two 1000 Mbps ports can support an aggregate bandwidth of 4 Gbps when operating at full duplex.

Table 73: Link Aggregation Commands

Command	Function	Mode
Manual Configuration Commands		
interface port-channel	Configures a trunk and enters interface configuration mode for the trunk	GC
port channel load-balance	Sets the load-distribution method among ports in aggregated links	GC
channel-group	Adds a port to a trunk	IC (Ethernet)
Dynamic Configuration Commands		
lacp	Configures LACP for the current interface	IC (Ethernet)
lacp admin-key	Configures a port's administration key	IC (Ethernet)
lacp port-priority	Configures a port's LACP port priority	IC (Ethernet)
lacp system-priority	Configures a port's LACP system priority	IC (Ethernet)
lacp admin-key	Configures an port channel's administration key	IC (Port Channel)
lacp timeout	Configures the timeout to wait for next LACPDU	IC (Port Channel)
Trunk Status Display Commands		
show interfaces status port-channel	Shows trunk information	NE, PE
show lacp	Shows LACP information	PE
show port-channel load-balance	Shows the load-distribution method used on aggregated links	PE

Guidelines for Creating Trunks

General Guidelines –

- Finish configuring trunks before you connect the corresponding network cables between switches to avoid creating a loop.
- A trunk can have up to 8 ports.
- The ports at both ends of a connection must be configured as trunk ports.
- All ports in a trunk must be configured in an identical manner, including communication mode (i.e., speed and duplex mode), VLAN assignments, and CoS settings.
- Any of the Gigabit ports on the front panel can be trunked together, including ports of different media types.
- All the ports in a trunk have to be treated as a whole when moved from/to, added or deleted from a VLAN via the specified port-channel.
- STP, VLAN, and IGMP settings can only be made for the entire trunk via the specified port-channel.

Dynamically Creating a Port Channel –

Ports assigned to a common port channel must meet the following criteria:

- Ports must have the same LACP system priority.
- Ports must have the same port admin key (Ethernet Interface).
- If the port channel admin key (lacp admin key - Port Channel) is not set when a channel group is formed (i.e., it has the null value of 0), this key is set to the same value as the port admin key (lacp admin key - Ethernet Interface) used by the interfaces that joined the group.
- However, if the port channel admin key is set, then the port admin key must be set to the same value for a port to be allowed to join a channel group.
- If a link goes down, LACP port priority is used to select the backup link.

Manual Configuration Commands

port channel load-balance

This command sets the load-distribution method among ports in aggregated links (for both static and dynamic trunks). Use the **no** form to restore the default setting.

Syntax

port channel load-balance {**dst-ip** | **dst-mac** | **src-dst-ip** | **src-dst-mac** | **src-ip** | **src-mac**}

no port channel load-balance

dst-ip - Load balancing based on destination IP address.

dst-mac - Load balancing based on destination MAC address.

src-dst-ip - Load balancing based on source and destination IP address.

src-dst-mac - Load balancing based on source and destination MAC address.

src-ip - Load balancing based on source IP address.

src-mac - Load balancing based on source MAC address.

Default Setting
src-dst-ip

Command Mode
Global Configuration

Command Usage
- This command applies to all static and dynamic trunks on the switch.
- To ensure that the switch traffic load is distributed evenly across all links in a trunk, select the source and destination addresses used in the load-balance calculation to provide the best result for trunk connections:
  - **dst-ip**: All traffic with the same destination IP address is output on the same link in a trunk. This mode works best for switch-to-router trunk links where traffic through the switch is destined for many different hosts. Do not use this mode for switch-to-server trunk links where the destination IP address is the same for all traffic.
  - **dst-mac**: All traffic with the same destination MAC address is output on the same link in a trunk. This mode works best for switch-to-switch trunk links where traffic through the switch is destined for many different hosts. Do not use this mode for switch-to-router trunk links where the destination MAC address is the same for all traffic.
  - **src-dst-ip**: All traffic with the same source and destination IP address is output on the same link in a trunk. This mode works best for switch-to-router trunk links where traffic through the switch is received from and destined for many different hosts.
  - **src-dst-mac**: All traffic with the same source and destination MAC address is output on the same link in a trunk. This mode works best for switch-to-switch trunk links where traffic through the switch is received from and destined for many different hosts.
  - **src-ip**: All traffic with the same source IP address is output on the same link in a trunk. This mode works best for switch-to-router or switch-to-server trunk links where traffic through the switch is received from many different hosts.

- **src-mac**: All traffic with the same source MAC address is output on the same link in a trunk. This mode works best for switch-to-switch trunk links where traffic through the switch is received from many different hosts.

Example

```
Console(config)#port channel load-balance dst-ip
Console(config)#
```

channel-group

This command adds a port to a trunk. Use the **no** form to remove a port from a trunk.

Syntax

channel-group *channel-id*

no channel-group

channel-id - Trunk index (Range: 1-8)

Default Setting

The current port will be added to this trunk.

Command Mode

Interface Configuration (Ethernet)

Command Usage

- When configuring static trunks, the switches must comply with the Cisco EtherChannel standard.
- Use **no channel-group** to remove a port group from a trunk.
- Use no interface port-channel to remove a trunk from the switch.

Example

The following example creates trunk 1 and then adds port 10:

```
Console(config)#interface port-channel 1
Console(config-if)#exit
Console(config)#interface ethernet 1/10
Console(config-if)#channel-group 1
Console(config-if)#
```

Dynamic Configuration Commands

lacp

This command enables 802.3ad Link Aggregation Control Protocol (LACP) for the current interface. Use the **no** form to disable it.

Syntax

[**no**] **lacp**

Default Setting

Disabled

Command Mode

Interface Configuration (Ethernet)

Command Usage

- The ports on both ends of an LACP trunk must be configured for full duplex, either by forced mode or auto-negotiation.
- A trunk formed with another switch using LACP will automatically be assigned the next available port-channel ID.
- If the target switch has also enabled LACP on the connected ports, the trunk will be activated automatically.
- If more than eight ports attached to the same target switch have LACP enabled, the additional ports will be placed in standby mode, and will only be enabled if one of the active links fails.

Example

The following shows LACP enabled on ports 1-3. Because LACP has also been enabled on the ports at the other end of the links, the show interfaces status port-channel 1 command shows that Trunk1 has been established.

```
Console(config)#interface ethernet 1/1
Console(config-if)#lacp
Console(config-if)#interface ethernet 1/2
Console(config-if)#lacp
Console(config-if)#interface ethernet 1/3
Console(config-if)#lacp
Console(config-if)#end
Console#show interfaces status port-channel 1
Information of Trunk 1
 Basic Information:
  Port Type              : 1000BASE-T
  MAC Address            : 12-34-12-34-12-3F
Configuration:
  Name                   :
  Port Admin             : Up
  Speed-duplex           : Auto
  Capabilities           : 10half, 10full, 100half, 100full, 1000full
  Broadcast Storm        : Enabled
  Broadcast Storm Limit  : 500 packets/second
```

```
  Multicast Storm        : Disabled
  Multicast Storm Limit  : 500 packets/second
  Unknown Unicast Storm       : Disabled
  Unknown Unicast Storm Limit : 500 packets/second
  Storm Threshold Resolution  : 1 packets/second
  Flow Control           : Disabled
  MAC Learning           : Enabled
  Link-up-down Trap      : Enabled
 Current status:
  Created By             : LACP
  Link Status            : Up
  Port Operation Status  : Up
  Operation Speed-duplex : 1000full
  Up Time                : 0w 0d 0h 0m 53s (53 seconds)
  Flow Control Type      : None
  Max Frame Size         : 1518 bytes (1522 bytes for tagged frames)
  MAC Learning Status    : Enabled
  Member Ports           : Eth1/1, Eth1/2, Eth1/3,
  Active Member Ports    : Eth1/1, Eth1/2, Eth1/3,
Console#
```

lacp admin-key (Ethernet Interface)

This command configures a port's LACP administration key. Use the **no** form to restore the default setting.

Syntax

lacp {**actor** | **partner**} **admin-key** *key*

no lacp {**actor** | **partner**} **admin-key**

actor - The local side an aggregate link.

partner - The remote side of an aggregate link.

key - The port admin key must be set to the same value for ports that belong to the same link aggregation group (LAG). (Range: 0-65535)

Default Setting

Actor: 1, Partner: 0

Command Mode

Interface Configuration (Ethernet)

Command Usage

- Ports are only allowed to join the same LAG if (1) the LACP system priority matches, (2) the LACP port admin key matches, and (3) the LACP port channel key matches (if configured).

- If the port channel admin key (lacp admin key - Port Channel) is not set when a channel group is formed (i.e., it has the null value of 0), this key is set to the same value as the port admin key (**lacp admin key** - Ethernet Interface) used by the interfaces that joined the group.

- Once the remote side of a link has been established, LACP operational settings are already in use on that side. Configuring LACP settings for the partner only applies to its administrative state, not its operational state.

Note: Configuring the partner admin-key does not affect remote or local switch operation. The local switch just records the partner admin-key for user reference.

- By default, the actor's operational key is determined by port's link speed (1000f - 4, 100f - 3, 10f - 2), and copied to the admin key.

Example

```
Console(config)#interface ethernet 1/5
Console(config-if)#lacp actor admin-key 120
Console(config-if)#
```

lacp port-priority

This command configures LACP port priority. Use the **no** form to restore the default setting.

Syntax

lacp {**actor** | **partner**} **port-priority** *priority*

no lacp {**actor** | **partner**} **port-priority**

actor - The local side an aggregate link.

partner - The remote side of an aggregate link.

priority - LACP port priority is used to select a backup link. (Range: 0-65535)

Default Setting

32768

Command Mode

Interface Configuration (Ethernet)

Command Usage

- Setting a lower value indicates a higher effective priority.
- If an active port link goes down, the backup port with the highest priority is selected to replace the downed link. However, if two or more ports have the same LACP port priority, the port with the lowest physical port number will be selected as the backup port.
- If an LAG already exists with the maximum number of allowed port members, and LACP is subsequently enabled on another port using a higher priority than an existing member, the newly configured port will replace an existing port member that has a lower priority.

- Once the remote side of a link has been established, LACP operational settings are already in use on that side. Configuring LACP settings for the partner only applies to its administrative state, not its operational state, and will only take effect the next time an aggregate link is established with the partner.

Example

```
Console(config)#interface ethernet 1/5
Console(config-if)#lacp actor port-priority 128
```

lacp system-priority

This command configures a port's LACP system priority. Use the **no** form to restore the default setting.

Syntax

lacp {**actor** | **partner**} **system-priority** *priority*

no lacp {**actor** | **partner**} **system-priority**

actor - The local side an aggregate link.

partner - The remote side of an aggregate link.

priority - This priority is used to determine link aggregation group (LAG) membership, and to identify this device to other switches during LAG negotiations. (Range: 0-65535)

Default Setting

32768

Command Mode

Interface Configuration (Ethernet)

Command Usage

- Port must be configured with the same system priority to join the same LAG.
- System priority is combined with the switch's MAC address to form the LAG identifier. This identifier is used to indicate a specific LAG during LACP negotiations with other systems.
- Once the remote side of a link has been established, LACP operational settings are already in use on that side. Configuring LACP settings for the partner only applies to its administrative state, not its operational state, and will only take effect the next time an aggregate link is established with the partner.

Example

```
Console(config)#interface ethernet 1/5
Console(config-if)#lacp actor system-priority 3
Console(config-if)#
```

lacp admin-key (Port Channel)

This command configures a port channel's LACP administration key string. Use the **no** form to restore the default setting.

Syntax

lacp admin-key *key*

no lacp admin-key

key - The port channel admin key is used to identify a specific link aggregation group (LAG) during local LACP setup on this switch. (Range: 0-65535)

Default Setting

0

Command Mode

Interface Configuration (Port Channel)

Command Usage

- Ports are only allowed to join the same LAG if (1) the LACP system priority matches, (2) the LACP port admin key matches, and (3) the LACP port channel key matches (if configured).
- If the port channel admin key (**lacp admin key** - Port Channel) is not set when a channel group is formed (i.e., it has the null value of 0), this key is set to the same value as the port admin key (lacp admin key - Ethernet Interface) used by the interfaces that joined the group. Note that when the LAG is no longer used, the port channel admin key is reset to 0.
- If the port channel admin key is set to a non-default value, the operational key is based upon LACP PDUs received from the partner, and the channel admin key is reset to the default value. The trunk identifier will also be changed by this process.

Example

```
Console(config)#interface port-channel 1
Console(config-if)#lacp admin-key 3
Console(config-if)#
```

lacp timeout

This command configures the timeout to wait for the next LACP data unit (LACPDU). Use the no form to restore the default setting.

Syntax

lacp timeout {**long** | **short**}

no lacp timeout

long - Specifies a slow timeout of 90 seconds.

short - Specifies a fast timeout of 3 seconds.

Default Setting

long

Command Mode

Interface Configuration (Port Channel)

Command Usage

- The timeout configured by this command is set in the LACP timeout bit of the Actor State field in transmitted LACPDUs. When the partner switch receives an LACPDU set with a short timeout from the actor switch, the partner adjusts the transmit LACPDU interval to 1 second. When it receives an LACPDU set with a long timeout from the actor, it adjusts the transmit LACPDU interval to 30 seconds.
- If the actor does not receive an LACPDU from its partner before the configured timeout expires, the partner port information will be deleted from the LACP group.
- When a dynamic port-channel member leaves a port-channel, the default timeout value will be restored on that port.
- When a dynamic port-channel is torn down, the configured timeout value will be retained. When the dynamic port-channel is constructed again, that timeout value will be used.

Example

```
Console(config)#interface port-channel 1
Console(config-if)#lacp timeout short
Console(config-if)#
```

Trunk Status Display Commands

show lacp

This command displays LACP information.

Syntax

show lacp [*port-channel*] {**counters** | **internal** | **neighbors** | **sysid**}

port-channel - Local identifier for a link aggregation group. (Range: 1-8)

counters - Statistics for LACP protocol messages.

internal - Configuration settings and operational state for local side.

neighbors - Configuration settings and operational state for remote side.

sysid - Summary of system priority and MAC address for all channel groups.

Default Setting

Port Channel: all

Command Mode

Privileged Exec

Example

```
Console#show lacp 1 counters
Port Channel: 1
 Member Port                 : Eth 1/24
 LACPDU Sent                 : 7
 LACPDU Received             : 6
 MarkerPDU Sent              : 0
 MarkerPDU Received          : 0
 MarkerResponsePDU Sent      : 0
 MarkerResponsePDU Received  : 0
 Unknown Packet Received     : 0
 Illegal Packet Received     : 0
⋮
```

Table 74: show lacp counters - display description

Field	Description
LACPDUs Sent	Number of valid LACPDUs transmitted from this channel group.
LACPDUs Received	Number of valid LACPDUs received on this channel group.
Marker Sent	Number of valid Marker PDUs transmitted from this channel group.
Marker Received	Number of valid Marker PDUs received by this channel group.
MarkerResponsePDU Sent	Number of valid MarkerResponse PDUs transmitted from this channel group.
MarkerResponsePDU Received	Number of valid MarkerResponse PDUs received by this channel group.

Table 74: show lacp counters - display description (Continued)

Field	Description
Unknown Packet Received	Number of frames received that either (1) Carry the Slow Protocols Ethernet Type value, but contain an unknown PDU, or (2) are addressed to the Slow Protocols group MAC Address, but do not carry the Slow Protocols Ethernet Type.
Unknown Packet Received	Number of frames that carry the Slow Protocols Ethernet Type value, but contain a badly formed PDU or an illegal value of Protocol Subtype.

```
Console#show lacp 1 internal
Port Channel : 1
Admin Key    : 0
Oper Key     : 4
Timeout      : Long
 ------------------------------------------------------------
 Member Port     : Eth 1/24
 Periodic Time   : 30 seconds
 System Priority : 32768
 Port Priority   : 32768
 Admin Key       : 4
 Oper Key        : 4
 Admin State     : Defaulted, Aggregatable, Long Timeout, Actvie LACP
 Oper State      : Distributing, Collecting, Synchronization, Aggregatable,
                   Long Timeout, Actvie LACP
⋮
```

Table 75: show lacp internal - display description

Field	Description
Admin Key	Current administrative value of the key for the aggregation port.
Oper Key	Current operational value of the key for the aggregation port.
Timeout	Time to wait for the next LACPDU before deleting partner port information.
Periodic Time	Number of seconds before invalidating received LACPDU information.
System Priority	LACP system priority assigned to this port channel.
Port Priority	LACP port priority assigned to this interface within the channel group.
Admin State, Oper State	Administrative or operational values of the actor's state parameters: ◆ Expired – The actor's receive machine is in the expired state; ◆ Defaulted – The actor's receive machine is using defaulted operational partner information, administratively configured for the partner. ◆ Distributing – If false, distribution of outgoing frames on this link is disabled; i.e., distribution is currently disabled and is not expected to be enabled in the absence of administrative changes or changes in received protocol information. ◆ Collecting – Collection of incoming frames on this link is enabled; i.e., collection is currently enabled and is not expected to be disabled in the absence of administrative changes or changes in received protocol information. ◆ Synchronization – The System considers this link to be IN_SYNC; i.e., it has been allocated to the correct Link Aggregation Group, the group has been associated with a compatible Aggregator, and the identity of the Link Aggregation Group is consistent with the System ID and operational Key information transmitted.

Table 75: show lacp internal - display description (Continued)

Field	Description
Admin State, Oper State (continued)	◆ Aggregation – The system considers this link to be aggregatable; i.e., a potential candidate for aggregation. ◆ Long timeout – Periodic transmission of LACPDUs uses a slow transmission rate. ◆ LACP-Activity – Activity control value with regard to this link. (0: Passive; 1: Active)

```
Console#show lacp 1 neighbors
Port Channel : 1
 ------------------------------------------------------------
 Member Port              : Eth 1/24
 Partner Admin System ID  : 32768, 00-00-00-00-00-00
 Partner Oper System ID   : 32768, FC-0A-81-B7-C7-E0
 Partner Admin Port ID    : 32768, 24
 Partner Oper Port ID     : 32768, 24
 Partner Admin Key        : 0
 Partner Oper Key         : 4
 Partner Admin State      : Defaulted, Distributing, Collecting,
                            Synchronization, Long Timeout, Passive LACP
 Partner Oper State       : Distributing, Collecting, Synchronization,
                            Aggregatable, Long Timeout, Actvie LACP
⋮
```

Table 76: show lacp neighbors - display description

Field	Description
Partner Admin System ID	LAG partner's system ID assigned by the user.
Partner Oper System ID	LAG partner's system ID assigned by the LACP protocol.
Partner Admin Port Number	Current administrative value of the port number for the protocol Partner.
Partner Oper Port ID	Operational port number assigned to this aggregation port by the port's protocol partner.
Port Admin Priority	Current administrative value of the port priority for the protocol partner.
Port Oper Priority	Priority value assigned to this aggregation port by the partner.
Admin Key	Current administrative value of the Key for the protocol partner.
Oper Key	Current operational value of the Key for the protocol partner.
Admin State	Administrative values of the partner's state parameters. (See preceding table.)
Oper State	Operational values of the partner's state parameters. (See preceding table.)

```
 Console#show lacp sysid
Port Channel     System Priority    System MAC Address
----------------------------------------------------------------------
            1              32768     00-30-F1-8F-2C-A7
            2              32768     00-30-F1-8F-2C-A7
            3              32768     00-30-F1-8F-2C-A7
```

```
          4              32768     00-30-F1-8F-2C-A7
          5              32768     00-30-F1-8F-2C-A7
          6              32768     00-30-F1-8F-2C-A7
          7              32768     00-30-F1-D4-73-A0
          8              32768     00-30-F1-D4-73-A0
          9              32768     00-30-F1-D4-73-A0
         10              32768     00-30-F1-D4-73-A0
         11              32768     00-30-F1-D4-73-A0
         12              32768     00-30-F1-D4-73-A0
⋮
```

Table 77: show lacp sysid - display description

Field	Description
Channel group	A link aggregation group configured on this switch.
System Priority*	LACP system priority for this channel group.
System MAC Address*	System MAC address.

* The LACP system priority and system MAC address are concatenated to form the LAG system ID.

show port-channel load-balance

This command shows the load-distribution method used on aggregated links.

Command Mode

Privileged Exec

Example

```
Console#show port-channel load-balance
Trunk Load Balance Mode: Destination IP address
Console#
```

13 Port Mirroring Commands

Data can be mirrored from a local port on the same switch or from a remote port on another switch for analysis at the target port using software monitoring tools or a hardware probe. This switch supports the following mirroring modes.

Table 78: Port Mirroring Commands

Command	Function
Local Port Mirroring	Mirrors data to another port for analysis without affecting the data passing through or the performance of the monitored port
RSPAN Mirroring	Mirrors data from remote switches over a dedicated VLAN

Local Port Mirroring Commands

This section describes how to mirror traffic from a source port to a target port.

Table 79: Mirror Port Commands

Command	Function	Mode
port monitor	Configures a mirror session	IC
show port monitor	Shows the configuration for a mirror port	PE

port monitor

This command configures a mirror session. Use the **no** form to clear a mirror session.

Syntax

port monitor *interface* [**rx** | **tx** | **both**]

no port monitor *interface*

interface

ethernet *unit/port* (source port)

unit - Unit identifier. (Range: 1)

port - Port number. (Range: 1-52)

rx - Mirror received packets.

tx - Mirror transmitted packets.

both - Mirror both received and transmitted packets.

vlan-id - VLAN ID (Range: 1-4094)

Default Setting

- No mirror session is defined.
- When enabled for an interface, default mirroring is for both received and transmitted packets.

Command Mode

Interface Configuration (Ethernet, destination port)

Command Usage

- You can mirror traffic from any source port to a destination port for real-time analysis. You can then attach a logic analyzer or RMON probe to the destination port and study the traffic crossing the source port in a completely unobtrusive manner.
- Set the destination port by specifying an Ethernet interface with the interface configuration command, and then use the port monitor command to specify the source of the traffic to mirror. Note that the destination port cannot be a trunk or trunk member port.
- When mirroring traffic from a port, the mirror port and monitor port speeds should match, otherwise traffic may be dropped from the monitor port.
- Spanning Tree BPDU packets are not mirrored to the target port.
- You can create multiple mirror sessions, but all sessions must share the same destination port.
- The destination port cannot be a trunk or trunk member port.

Example

The following example configures the switch to mirror all packets from port 6 to 5:

```
Console(config)#interface ethernet 1/5
Console(config-if)#port monitor ethernet 1/6 both
Console(config-if)#
```

show port monitor

This command displays mirror information.

Syntax

show port monitor [*interface*]

interface - **ethernet** *unit/port* (source port)

unit - Unit identifier. (Range: 1)

port - Port number. (Range: 1-52)

Default Setting
Shows all sessions.

Command Mode
Privileged Exec

Command Usage
This command displays the currently configured source port, destination port, and mirror mode (i.e., RX, TX, RX/TX).

Example
The following shows mirroring configured from port 6 to port 5:

```
Console(config)#interface ethernet 1/5
Console(config-if)#port monitor ethernet 1/6
Console(config-if)#end
Console#show port monitor
Port Mirroring
-------------------------------------
 Destination Port (listen port)  : Eth 1/12
 Source Port (monitored Port)    : Eth 1/ 1
 Mode                            : RX/TX
Console#
```

RSPAN Mirroring Commands

Remote Switched Port Analyzer (RSPAN) allows you to mirror traffic from remote switches for analysis on a local destination port.

Table 80: RSPAN Commands

Command	Function	Mode
vlan rspan	Creates a VLAN dedicated to carrying RSPAN traffic	VC
rspan source	Specifies the source port and traffic type to be mirrored	GC
rspan destination	Specifies the destination port to monitor the mirrored traffic	GC
rspan remote vlan	Specifies the RSPAN VLAN, switch role (source, intermediate or destination), and the uplink ports	GC
no rspan session	Deletes a configured RSPAN session	GC
show rspan	Displays the configuration settings for an RSPAN session	PE

Configuration Guidelines

Take the following steps to configure an RSPAN session:

1. Use the vlan rspan command to configure a VLAN to use for RSPAN. (Default VLAN 1 is prohibited.)

2. Use the rspan source command to specify the interfaces and the traffic type (RX, TX or both) to be monitored.

3. Use the rspan destination command to specify the destination port for the traffic mirrored by an RSPAN session.

4. Use the rspan remote vlan command to specify the VLAN to be used for an RSPAN session, to specify the switch's role as a source, intermediate relay, or destination of the mirrored traffic, and to configure the uplink ports designated to carry this traffic.

RSPAN Limitations

The following limitations apply to the use of RSPAN on this switch:

- *RSPAN Ports* – Only ports can be configured as an RSPAN source, destination, or uplink; static and dynamic trunks are not allowed. A port can only be configured as one type of RSPAN interface – source, destination, or uplink. Also, note that the source port and destination port cannot be configured on the same switch.

  Only 802.1Q trunk or hybrid (i.e., general use) ports can be configured as an RSPAN uplink or destination port – access ports are not allowed (see switchport mode).

- *Local/Remote Mirror* – The destination of a local mirror session (created with the port monitor command) cannot be used as the destination for RSPAN traffic.
- *Spanning Tree* – If the spanning tree is disabled, BPDUs will not be flooded onto the RSPAN VLAN.

  MAC address learning is not supported on RSPAN uplink ports when RSPAN is enabled on the switch. Therefore, even if spanning tree is enabled after RSPAN has been configured, MAC address learning will still not be re-started on the RSPAN uplink ports.

- *IEEE 802.1X* – RSPAN and 802.1X are mutually exclusive functions. When 802.1X is enabled globally, RSPAN uplink ports cannot be configured, even though RSPAN source and destination ports can still be configured. When RSPAN uplink ports are enabled on the switch, 802.1X cannot be enabled globally.

  RSPAN uplink ports cannot be configured to use IEEE 802.1X Port Authentication, but RSPAN source ports and destination ports can be configured to use it

- *Port Security* – If port security is enabled on any port, that port cannot be set as an RSPAN uplink port, even though it can still be configured as an RSPAN source or destination port. Also, when a port is configured as an RSPAN uplink port, port security cannot be enabled on that port.

rspan source

Use this command to specify the source port and traffic type to be mirrored remotely. Use the **no** form to disable RSPAN on the specified port, or with a traffic type keyword to disable mirroring for the specified type.

Syntax

[**no**] **rspan session** *session-id* **source interface** *interface-list* [**rx** | **tx** | **both**]

session-id – A number identifying this RSPAN session. (Range: 1-3)

Three sessions are allowed, including both local and remote mirroring, using different VLANs for RSPAN sessions.

interface-list – One or more source ports. Use a hyphen to indicate a consecutive list of ports or a comma between non-consecutive ports.

ethernet *unit/port*

unit - Unit identifier. (Range: 1)

port - Port number. (Range: 1-52)

rx - Mirror received packets.

tx - Mirror transmitted packets.

both - Mirror both received and transmitted packets.

Default Setting

Both TX and RX traffic is mirrored

Command Mode

Global Configuration

Command Usage

- One or more source ports can be assigned to the same RSPAN session, either on the same switch or on different switches.
- Only ports can be configured as an RSPAN source – static and dynamic trunks are not allowed.
- Only 802.1Q trunk or hybrid (i.e., general use) ports can be configured as an RSPAN source port – access ports are not allowed (see switchport mode).
- The source port and destination port cannot be configured on the same switch.

Example

The following example configures the switch to mirror received packets from port 2 and 3:

```
Console(config)#rspan session 1 source interface ethernet 1/2
Console(config)#rspan session 1 source interface ethernet 1/3
Console(config)#
```

rspan destination

Use this command to specify the destination port to monitor the mirrored traffic. Use the **no** form to disable RSPAN on the specified port.

Syntax

rspan session *session-id* **destination interface** *interface* [**tagged** | **untagged**]

no rspan session *session-id* **destination interface** *interface*

session-id – A number identifying this RSPAN session. (Range: 1-3)

Three sessions are allowed, including both local and remote mirroring, using different VLANs for RSPAN sessions.

interface

ethernet *unit/port*

unit - Unit identifier. (Range: 1)

port - Port number. (Range: 1-52)

tagged - Traffic exiting the destination port carries the RSPAN VLAN tag.

untagged - Traffic exiting the destination port is untagged.

Default Setting

Traffic exiting the destination port is untagged.

Command Mode

Global Configuration

Command Usage

- Only one destination port can be configured on the same switch per session, but a destination port can be configured on more than one switch for the same session.
- Only 802.1Q trunk or hybrid (i.e., general use) ports can be configured as an RSPAN destination port – access ports are not allowed (see switchport mode).
- Only ports can be configured as an RSPAN destination – static and dynamic trunks are not allowed.
- The source port and destination port cannot be configured on the same switch.

- A destination port can still send and receive switched traffic, and participate in any Layer 2 protocols to which it has been assigned.

Example

The following example configures port 4 to receive mirrored RSPAN traffic:

```
Console(config)#rspan session 1 destination interface ethernet 1/2
Console(config)#
```

rspan remote vlan

Use this command to specify the RSPAN VLAN, switch role (source, intermediate or destination), and the uplink ports. Use the **no** form to disable the RSPAN on the specified VLAN.

Syntax

[**no**] **rspan session** *session-id* **remote vlan** *vlan-id*
{**source** | **intermediate** | **destination**} **uplink** *interface*

session-id – A number identifying this RSPAN session. (Range: 1-3)

Three sessions are allowed, including both local and remote mirroring, using different VLANs for RSPAN sessions.

vlan-id - ID of configured RSPAN VLAN. (Range: 1-4094)
Use the vlan rspan command to reserve a VLAN for RSPAN mirroring before enabling RSPAN with this command.

source - Specifies this device as the source of remotely mirrored traffic.

intermediate - Specifies this device as an intermediate switch, transparently passing mirrored traffic from one or more sources to one or more destinations.

destination - Specifies this device as a switch configured with a destination port which is to receive mirrored traffic for this session.

uplink - A port configured to receive or transmit remotely mirrored traffic.

interface - **ethernet** *unit/port*

ethernet *unit/port*

unit - Unit identifier. (Range: 1)

port - Port number. (Range: 1-52)

Default Setting

None

Command Mode

Global Configuration

Command Usage

- Only 802.1Q trunk or hybrid (i.e., general use) ports can be configured as an RSPAN uplink port – access ports are not allowed (see switchport mode).
- Only one uplink port can be configured on a source switch, but there is no limitation on the number of uplink ports configured on an intermediate or destination switch.
- Only destination and uplink ports will be assigned by the switch as members of this VLAN. Ports cannot be manually assigned to an RSPAN VLAN with the switchport allowed vlan command. Also, note that the show vlan command will not display any members for an RSPAN VLAN, but will only show configured RSPAN VLAN identifiers.

Example

The following example enables RSPAN on VLAN 2, specifies this device as an RSPAN destination switch, and the uplink interface as port 3:

```
Console(config)#rspan session 1 remote vlan 2 destination uplink ethernet 1/3
Console(config)#
```

no rspan session

Use this command to delete a configured RSPAN session.

Syntax

no rspan session *session-id*

session-id – A number identifying this RSPAN session. (Range: 1-3)

Three sessions are allowed, including both local and remote mirroring, using different VLANs for RSPAN sessions.

Command Mode

Global Configuration

Command Usage

The **no rspan session** command must be used to disable an RSPAN VLAN before it can be deleted from the VLAN database (see the vlan command).

Example

```
Console(config)#no rspan session 1
Console(config)#
```

show rspan

Use this command to displays the configuration settings for an RSPAN session.

Syntax

show rspan session [*session-id*]

session-id – A number identifying this RSPAN session. (Range: 1)

Three sessions are allowed, including both local and remote mirroring, using different VLANs for RSPAN sessions.

Command Mode

Privileged Exec

Example

```
Console#show rspan session
RSPAN Session ID                : 1
Source Ports (mirrored ports)   : None
  RX Only                       : None
  TX Only                       : None
  BOTH                          : None
Destination Port (monitor port) : Eth 1/2
Destination Tagged Mode         : Untagged
Switch Role                     : Destination
RSPAN VLAN                      : 2
RSPAN Uplink Ports              : Eth 1/3
Operation Status                : Up
Console#
```

14 Congestion Control Commands

The switch can set the maximum upload or download data transfer rate for any port. It can control traffic storms by setting a maximum threshold for broadcast traffic or multicast traffic. It can also set bounding thresholds for broadcast and multicast storms which can be used to automatically trigger rate limits or to shut down a port.

Table 81: Congestion Control Commands

Command Group	Function
Rate Limiting	Sets the input and output rate limits for a port.
Storm Control	Sets the traffic storm threshold for each port.

Rate Limit Commands

Rate limit commands allow the network manager to control the maximum rate for traffic transmitted or received on an interface. Rate limiting is configured on interfaces at the edge of a network to limit traffic into or out of the network. Packets that exceed the acceptable amount of traffic are dropped.

Rate limiting can be applied to individual ports or trunks. When an interface is configured with this feature, the traffic rate will be monitored by the hardware to verify conformity. Non-conforming traffic is dropped.

Table 82: Rate Limit Commands

Command	Function	Mode
rate-limit	Configures the maximum input or output rate for an interface	IC

rate-limit

This command defines the rate limit for a specific interface. Use this command without specifying a rate to enable rate limiting. Use the **no** form to disable rate limiting.

Syntax

rate-limit {**input** | **output**} [*rate*]

no rate-limit {**input** | **output**}

input – Input rate for specified interface

output – Output rate for specified interface

rate – Maximum value in kbps.
(Range: 64 - 1,000,000 kbits per second for Gigabit Ethernet ports;
64 - 10,000,000 kbits per second for 10 Gigabit Ethernet ports)
The resolution at which the rate can be configured is 16 kbits/sec.

Default Setting

Disabled

Command Mode

Interface Configuration (Ethernet, Port Channel)

Command Usage

Using both rate limiting and storm control on the same interface may lead to unexpected results. It is therefore not advisable to use both of these commands on the same interface.

Example

```
Console(config)#interface ethernet 1/1
Console(config-if)#rate-limit input 64
Console(config-if)#
```

Related Command

show interfaces switchport (365)

Storm Control Commands

Storm control commands can be used to configure broadcast, multicast, and unknown unicast storm control thresholds. Traffic storms may occur when a device on your network is malfunctioning, or if application programs are not well designed or properly configured. If there is too much traffic on your network, performance can be severely degraded or everything can come to complete halt.

You can protect your network from traffic storms by setting a threshold for broadcast, multicast or unknown unicast traffic. Any packets exceeding the specified threshold will then be dropped.

Table 83: Rate Limit Commands

Command	Function	Mode
switchport packet-rate	Configures broadcast, multicast, and unknown unicast storm control thresholds	IC
show interfaces switchport	Displays the administrative and operational status of an interface	NE, PE

switchport packet-rate

This command configures broadcast, multicast and unknown unicast storm control. Use the **no** form to restore the default setting.

Syntax

switchport {**broadcast** | **multicast** | **unknown-unicast**} **packet-rate** *rate*

no switchport {**broadcast** | **multicast** | **unknown-unicast**}

broadcast - Specifies storm control for broadcast traffic.

multicast - Specifies storm control for multicast traffic.

unknown-unicast - Specifies storm control for unknown unicast traffic.

rate - Threshold level as a rate; i.e. (Range: 1-262142 pps)

Default Setting

Disabled

Command Mode

Interface Configuration (Ethernet, Port Channel)

Command Usage

- When traffic exceeds the threshold specified for broadcast and multicast or unknown unicast traffic, packets exceeding the threshold are dropped until the rate falls back down beneath the threshold.
- Using both rate limiting and storm control on the same interface may lead to unexpected results. It is therefore not advisable to use both of these commands on the same interface.

Example

The following shows how to configure broadcast storm control at 600 packets per second:

```
Console(config)#interface ethernet 1/5
Console(config-if)#switchport broadcast packet-rate 600
Console(config-if)#
```

Related Commands

show interfaces switchport (365)

15 Loopback Detection Commands

The switch can be configured to detect general loopback conditions caused by hardware problems or faulty protocol settings. When enabled, a control frame is transmitted on the participating ports, and the switch monitors inbound traffic to see if the frame is looped back.

Table 84: Loopback Detection Commands

Command	Function	Mode
loopback-detection	Enables loopback detection globally on the switch or on a specified interface	GC, IC
loopback-detection action	Specifies the response to take for a detected loopback condition	GC
loopback-detection recover-time	Specifies the interval to wait before releasing an interface from shutdown state	GC
loopback-detection transmit-interval	Specifies the interval at which to transmit loopback detection control frames	GC
loopback detection trap	Configures the switch to send a trap when a loopback condition is detected or the switch recover from a loopback	GC
loopback-detection release	Manually releases all interfaces currently shut down by the loopback detection feature	PE
show loopback-detection	Shows loopback detection configuration settings for the switch or for a specified interface	PE

Usage Guidelines

- The default settings for the control frame transmit interval and recover time may be adjusted to improve performance for your specific environment. The shutdown mode may also need to be changed once you determine what kind of packets are being looped back.

- General loopback detection provided by the commands described in this section and loopback detection provided by the spanning tree protocol cannot both be enabled at the same time. If loopback detection is enabled for the spanning tree protocol, general loopback detection cannot be enabled on the same interface.

- When a loopback event is detected on an interface or when a interface is released from a shutdown state caused by a loopback event, a trap message is sent and the event recorded in the system log.

- Loopback detection must be enabled both globally and on an interface for loopback detection to take effect.

loopback-detection

This command enables loopback detection globally on the switch or on a specified interface. Use the **no** form to disable loopback detection.

Syntax

[**no**] **loopback-detection**

Default Setting

Enabled

Command Mode

Global Configuration
Interface Configuration (Ethernet, Port Channel)

Command Usage

Loopback detection must be enabled globally for the switch by this command and enabled for a specific interface for this function to take effect.

Example

This example enables general loopback detection on the switch, disables loopback detection provided for the spanning tree protocol on port 1, and then enables general loopback detection for that port.

```
Console(config)#loopback-detection
Console(config)#interface ethernet 1/1
Console(config-if)#no spanning-tree loopback-detection
Console(config-if)#loopback-detection
Console(config)#
```

loopback-detection action

This command specifies the protective action the switch takes when a loopback condition is detected. Use the **no** form to restore the default setting.

Syntax

loopback-detection action {**none** | **shutdown**}

no loopback-detection action

none - No action is taken.

shutdown - Shuts down the interface.

Default Setting

Shut down

Command Mode

Global Configuration

Command Usage

- When a port receives a control frame sent by itself, this means that the port is in looped state, and the VLAN in the frame payload is also in looped state with the wrong VLAN tag. The looped port is therefore shut down.
- Use the loopback-detection recover-time command to set the time to wait before re-enabling an interface shut down by the loopback detection process.
- When the loopback detection response is changed, any ports placed in shutdown state by the loopback detection process will be immediately restored to operation regardless of the remaining recover time.

Example

This example sets the loopback detection mode to shut down user traffic.

```
Console(config)#loopback-detection action shutdown
Console(config)#
```

loopback-detection recover-time

This command specifies the interval to wait before the switch automatically releases an interface from shutdown state. Use the **no** form to restore the default setting.

Syntax

loopback-detection recover-time *seconds*

no loopback-detection recover-time

seconds - Recovery time from shutdown state. (Range: 60-1,000,000 seconds, or 0 to disable automatic recovery)

Default Setting

60 seconds

Command Mode

Global Configuration

Command Usage

- When the loopback detection mode is changed, any ports placed in shutdown state by the loopback detection process will be immediately restored to operation regardless of the remaining recover time.
- If the recovery time is set to zero, all ports placed in shutdown state can be restored to operation using the loopback-detection release command. To restore a specific port, use the no shutdown command.

Example

```
Console(config)#loopback-detection recover-time 120
Console(config-if)#
```

loopback-detection transmit-interval

This command specifies the interval at which to transmit loopback detection control frames. Use the **no** form to restore the default setting.

Syntax

loopback-detection transmit-interval *seconds*

no loopback-detection transmit-interval

seconds - The transmission interval for loopback detection control frames. (Range: 1-32767 seconds)

Default Setting

10 seconds

Command Mode

Global Configuration

Example

```
Console(config)#loopback-detection transmit-interval 60
Console(config)#
```

loopback detection trap

This command sends a trap when a loopback condition is detected, or when the switch recovers from a loopback condition. Use the **no** form to restore the default state.

Syntax

loopback-detection trap [**both** | **detect** | **none** | **recover**]

no loopback-detection trap

both - Sends an SNMP trap message when a loopback condition is detected, or when the switch recovers from a loopback condition.

detect - Sends an SNMP trap message when a loopback condition is detected.

none - Does not send an SNMP trap for loopback detection or recovery.

recover - Sends an SNMP trap message when the switch recovers from a loopback condition.

Default Setting

None

Command Mode
Global Configuration

Command Usage
Refer to the loopback-detection recover-time command for information on conditions which constitute loopback recovery.

Example

```
Console(config)#loopback-detection trap both
Console(config)#
```

loopback-detection release

This command releases all interfaces currently shut down by the loopback detection feature.

Syntax

loopback-detection release

Command Mode
Privileged Exec

Example

```
Console#loopback-detection release
Console(config)#
```

show loopback-detection

This command shows loopback detection configuration settings for the switch or for a specified interface.

Syntax

show loopback-detection [*interface*]

interface

ethernet *unit*/*port*

unit - Unit identifier. (Range: 1)

port - Port number. (Range: 1-52)

Command Mode
Privileged Exec

Example

```
Console#show loopback-detection
Loopback Detection Global Information
 Global Status      : Enabled
 Transmit Interval : 10
```

```
 Recover Time       : 60
 Action             : Shutdown
 Trap               : None
Loopback Detection Port Information
 Port      Admin State  Oper State
 --------  -----------  ----------
 Eth 1/ 1  Enabled      Normal
 Eth 1/ 2  Disabled     Disabled
 Eth 1/ 3  Disabled     Disabled
⋮
Console#show loopback-detection ethernet 1/1
Loopback Detection Information of Eth 1/1
 Admin State : Enabled
 Oper State  : Normal
 Looped VLAN : None
Console#
```

16 Address Table Commands

These commands are used to configure the address table for filtering specified addresses, displaying current entries, clearing the table, or setting the aging time.

Table 85: Address Table Commands

Command	Function	Mode
mac-address-table aging-time	Sets the aging time of the address table	GC
mac-address-table static	Maps a static address to a port in a VLAN	GC
clear collision-mac-address-table	Removes all entries from the collision MAC address table	PE
clear mac-address-table dynamic	Removes any learned entries from the forwarding database	PE
show collision-mac-address-table	Shows a shows a list of MAC addresses that cannot be learned by the switch due to hash collisions	PE
show mac-address-table	Displays entries in the bridge-forwarding database	PE
show mac-address-table aging-time	Shows the aging time for the address table	PE
show mac-address-table count	Shows the number of MAC addresses used and the number of available MAC addresses	PE

mac-address-table aging-time

This command sets the aging time for entries in the address table. Use the **no** form to restore the default aging time.

Syntax

mac-address-table aging-time *seconds*

no mac-address-table aging-time

seconds - Aging time. (Range: 6-7200 seconds; 0 to disable aging)

Default Setting

300 seconds

Command Mode

Global Configuration

Command Usage

The aging time is used to age out dynamically learned forwarding information.

Example

```
Console(config)#mac-address-table aging-time 100
Console(config)#
```

mac-address-table static

This command maps a static address to a destination port in a VLAN. Use the **no** form to remove an address.

Syntax

mac-address-table static *mac-address* **interface** *interface* **vlan** *vlan-id* [*action*]

no mac-address-table static *mac-address* **vlan** *vlan-id*

mac-address - MAC address.

interface

ethernet *unit/port*

unit - Unit identifier. (Range: 1)

port - Port number. (Range: 1-52)

port-channel *channel-id* (Range: 1-8)

vlan-id - VLAN ID (Range: 1-4094)

action -

delete-on-reset - Assignment lasts until the switch is reset.

permanent - Assignment is permanent.

Default Setting

No static addresses are defined. The default mode is **permanent**.

Command Mode

Global Configuration

Command Usage

The static address for a host device can be assigned to a specific port within a specific VLAN. Use this command to add static addresses to the MAC Address Table. Static addresses have the following characteristics:

- Static addresses will not be removed from the address table when a given interface link is down.
- Static addresses are bound to the assigned interface and will not be moved. When a static address is seen on another interface, the address will be ignored and will not be written to the address table.
- A static address cannot be learned on another port until the address is removed with the **no** form of this command.

Example

```
Console(config)#mac-address-table static 00-e0-29-94-34-de interface ethernet
  1/1 vlan 1 delete-on-reset
Console(config)#
```

clear collision-mac-address-table

This command removes all entries from the collision MAC address table.

Default Setting

None

Command Mode

Privileged Exec

Example

```
Console#clear collision-mac-address-table
Console#
```

clear mac-address-table dynamic

This command removes any learned entries from the forwarding database.

Default Setting

None

Command Mode

Privileged Exec

Command Usage

Even if a hash collision for a MAC address is resolved, entries in collision MAC address table are not removed until this command is issued to reset the table, or the system is reset.

Example

```
Console#clear mac-address-table dynamic
Console#
```

show collision-mac-address-table

This command shows a list of MAC addresses that cannot be learned by the switch due to hash collisions.

Command Mode

Privileged Exec

Example

```
Console#show collision-mac-address-table
MAC Address        VLAN  Collision Count
----------------- ----- ----------------
90-e6-ba-cb-cd-d6     1                2
Total collision mac number: 1
Console#
```

show mac-address-table

This command shows classes of entries in the bridge-forwarding database.

Syntax

show mac-address-table [**address** *mac-address* [*mask*]] [**interface** *interface*] [**vlan** *vlan-id*] [**sort** {**address** | **vlan** | **interface**}]

mac-address - MAC address.

mask - Bits to match in the address.

interface

ethernet *unit/port*

unit - Unit identifier. (Range: 1)

port - Port number. (Range: 1-52)

port-channel *channel-id* (Range: 1-8)

vlan-id - VLAN ID (Range: 1-4094)

sort - Sort by address, vlan or interface.

Default Setting

None

Command Mode

Privileged Exec

Command Usage

- The MAC Address Table contains the MAC addresses associated with each interface. Note that the Type field may include the following types:
  - Learn - Dynamic address entries
  - Config - Static entry
  - Security - Port Security
- The mask should be hexadecimal numbers (representing an equivalent bit mask) in the form xx-xx-xx-xx-xx-xx that is applied to the specified MAC address. Enter hexadecimal numbers, where an equivalent binary bit “0” means to match a bit and “1” means to ignore a bit. For example, a mask of 00-00-00-00-00-00 means an exact match, and a mask of FF-FF-FF-FF-FF-FF means “any.”
- The maximum number of address entries is 16K.

Example

```
Console#show mac-address-table
 Interface MAC Address       VLAN Type     Life Time
 --------- ----------------- ---- -------- ----------------
  CPU      00-E0-00-00-00-01    1 CPU      Delete on Reset
  Eth 1/ 1 00-E0-0C-10-90-09    1 Learn    Delete on Timeout
  Eth 1/ 1 00-E0-29-94-34-64    1 Learn    Delete on Timeout
Console#
```

show mac-address-table aging-time

This command shows the aging time for entries in the address table.

Default Setting

None

Command Mode

Privileged Exec

Example

```
Console#show mac-address-table aging-time
 Aging Status : Enabled
 Aging Time: 300 sec.
Console#
```

show mac-address-table count

This command shows the number of MAC addresses used and the number of available MAC addresses for the overall system or for an interface.

Syntax

show mac-address-table count [**interface** *interface*]

interface

ethernet *unit/port*

unit - Unit identifier. (Range: 1)

port - Port number. (Range: 1-52)

port-channel *channel-id* (Range: 1-8)

Default Setting

None

Command Mode

Privileged Exec

Example

```
Console#show mac-address-table count interface ethernet 1/1

MAC Entries for Eth 1/1
Total Address Count      :0
Static Address Count     :0
Dynamic Address Count    :0

Console#show mac-address-table count

Compute the number of MAC Address...

Maximum number of MAC Address which can be created in the system:
Total Number of MAC Address      : 16384
Number of Static MAC Address     : 1024

Current number of entries which have been created in the system:
Total Number of MAC Address      : 3
Number of Static MAC Address     : 1
Number of Dynamic MAC Address    : 2
Console#
```

17 Spanning Tree Commands

This section includes commands that configure the Spanning Tree Algorithm (STA) globally for the switch, and commands that configure STA for the selected interface.

Table 86: Spanning Tree Commands

Command	Function	Mode
spanning-tree	Enables the spanning tree protocol	GC
spanning-tree cisco-prestandard	Configures spanning tree operation to be compatible with Cisco prestandard versions	GC
spanning-tree forward-time	Configures the spanning tree bridge forward time	GC
spanning-tree hello-time	Configures the spanning tree bridge hello time	GC
spanning-tree max-age	Configures the spanning tree bridge maximum age	GC
spanning-tree mode	Configures STP, RSTP or MSTP mode	GC
spanning-tree mst configuration	Changes to MSTP configuration mode	GC
spanning-tree pathcost method	Configures the path cost method for RSTP/MSTP	GC
spanning-tree priority	Configures the spanning tree bridge priority	GC
spanning-tree system-bpdu-flooding	Floods BPDUs to all other ports or just to all other ports in the same VLAN when global spanning tree is disabled	GC
spanning-tree transmission-limit	Configures the transmission limit for RSTP/MSTP	GC
max-hops	Configures the maximum number of hops allowed in the region before a BPDU is discarded	MST
mst priority	Configures the priority of a spanning tree instance	MST
mst vlan	Adds VLANs to a spanning tree instance	MST
name	Configures the name for the multiple spanning tree	MST
revision	Configures the revision number for the multiple spanning tree	MST
spanning-tree bpdu-filter	Filters BPDUs for edge ports	IC
spanning-tree bpdu-guard	Shuts down an edge port if it receives a BPDU	IC
spanning-tree cost	Configures the spanning tree path cost of an interface	IC
spanning-tree edge-port	Enables fast forwarding for edge ports	IC
spanning-tree link-type	Configures the link type for RSTP/MSTP	IC
spanning-tree loopback-detection	Enables BPDU loopback detection for a port	IC

Table 86: Spanning Tree Commands (Continued)

Command	Function	Mode
spanning-tree loopback-detection action	Configures the response for loopback detection to block user traffic or shut down the interface	IC
spanning-tree loopback-detection release-mode	Configures loopback release mode for a port	IC
spanning-tree loopback-detection trap	Enables BPDU loopback SNMP trap notification for a port	IC
spanning-tree mst cost	Configures the path cost of an instance in the MST	IC
spanning-tree mst port-priority	Configures the priority of an instance in the MST	IC
spanning-tree port-bpdu-flooding	Floods BPDUs to other ports when global spanning tree is disabled	IC
spanning-tree port-priority	Configures the spanning tree priority of an interface	IC
spanning-tree root-guard	Prevents a designated port from passing superior BPDUs	IC
spanning-tree spanning-disabled	Disables spanning tree for an interface	IC
spanning-tree tc-prop-stop	Stops propagation of topology change information	IC
spanning-tree loopback-detection release	Manually releases a port placed in discarding state by loopback-detection	PE
spanning-tree protocol-migration	Re-checks the appropriate BPDU format	PE
show spanning-tree	Shows spanning tree configuration for the common spanning tree (i.e., overall bridge), a selected interface, or an instance within the multiple spanning tree	PE
show spanning-tree mst configuration	Shows the multiple spanning tree configuration	PE
show spanning-tree tc-prop	Shows configuration of topology change propagation domains	PE

spanning-tree

This command enables the Spanning Tree Algorithm globally for the switch. Use the **no** form to disable it.

Syntax

[**no**] **spanning-tree**

Default Setting

Spanning tree is disabled.

Command Mode

Global Configuration

Command Usage

- The Spanning Tree Algorithm (STA) can be used to detect and disable network loops, and to provide backup links between switches, bridges or routers. This

allows the switch to interact with other bridging devices (that is, an STA-compliant switch, bridge or router) in your network to ensure that only one route exists between any two stations on the network, and provide backup links which automatically take over when a primary link goes down.

- When spanning tree is enabled globally by this command or enabled on an interface (spanning-tree spanning-disabled command), loopback detection is disabled.

Example

This example shows how to enable the Spanning Tree Algorithm for the switch:

```
Console(config)#spanning-tree
Console(config)#
```

spanning-tree cisco-prestandard

This command configures spanning tree operation to be compatible with Cisco prestandard versions. Use the **no** form to restore the default setting.

[**no**] **spanning-tree cisco-prestandard**

Default Setting

Disabled

Command Mode

Global Configuration

Command Usage

Cisco prestandard versions prior to Cisco IOS Release 12.2(25)SEC do not fully follow the IEEE standard, causing some state machine procedures to function incorrectly. The command forces the spanning tree protocol to function in a manner compatible with Cisco prestandard versions.

Example

```
Console(config)#spanning-tree cisco-prestandard
Console(config)#
```

spanning-tree forward-time

This command configures the spanning tree bridge forward time globally for this switch. Use the **no** form to restore the default.

Syntax

spanning-tree forward-time *seconds*

no spanning-tree forward-time

seconds - Time in seconds. (Range: 4 - 30 seconds)
The minimum value is the higher of 4 or [(max-age / 2) + 1].

Default Setting
15 seconds

Command Mode
Global Configuration

Command Usage
This command sets the maximum time (in seconds) a port will wait before changing states (i.e., discarding to learning to forwarding). This delay is required because every device must receive information about topology changes before it starts to forward frames. In addition, each port needs time to listen for conflicting information that would make it return to the discarding state; otherwise, temporary data loops might result.

Example

```
Console(config)#spanning-tree forward-time 20
Console(config)#
```

spanning-tree hello-time

This command configures the spanning tree bridge hello time globally for this switch. Use the **no** form to restore the default.

Syntax

spanning-tree hello-time *time*

no spanning-tree hello-time

time - Time in seconds. (Range: 1-10 seconds).
The maximum value is the lower of 10 or [(max-age / 2) - 1].

Default Setting
2 seconds

Command Mode
Global Configuration

Command Usage
This command sets the time interval (in seconds) at which the root device transmits a configuration message.

Example

```
Console(config)#spanning-tree hello-time 5
Console(config)#
```

Related Commands
spanning-tree forward-time (421)
spanning-tree max-age (423)

spanning-tree max-age

This command configures the spanning tree bridge maximum age globally for this switch. Use the **no** form to restore the default.

Syntax

spanning-tree max-age *seconds*

no spanning-tree max-age

seconds - Time in seconds. (Range: 6-40 seconds)
The minimum value is the higher of 6 or [2 x (hello-time + 1)].
The maximum value is the lower of 40 or [2 x (forward-time - 1)].

Default Setting

20 seconds

Command Mode

Global Configuration

Command Usage

This command sets the maximum time (in seconds) a device can wait without receiving a configuration message before attempting to reconverge. All device ports (except for designated ports) should receive configuration messages at regular intervals. Any port that ages out STA information (provided in the last configuration message) becomes the designated port for the attached LAN. If it is a root port, a new root port is selected from among the device ports attached to the network.

Example

```
Console(config)#spanning-tree max-age 40
Console(config)#
```

Related Commands

spanning-tree forward-time (421)
spanning-tree hello-time (422)

spanning-tree mode

This command selects the spanning tree mode for this switch. Use the **no** form to restore the default.

Syntax

spanning-tree mode {**stp** | **rstp** | **mstp**}

no spanning-tree mode

stp - Spanning Tree Protocol (IEEE 802.1D)

rstp - Rapid Spanning Tree Protocol (IEEE 802.1w)

mstp - Multiple Spanning Tree (IEEE 802.1s)

Default Setting
rstp

Command Mode
Global Configuration

Command Usage
- Spanning Tree Protocol
  This option uses RSTP set to STP forced compatibility mode. It uses RSTP for the internal state machine, but sends only 802.1D BPDUs. This creates one spanning tree instance for the entire network. If multiple VLANs are implemented on a network, the path between specific VLAN members may be inadvertently disabled to prevent network loops, thus isolating group members. When operating multiple VLANs, we recommend selecting the MSTP option.

- Rapid Spanning Tree Protocol
  RSTP supports connections to either STP or RSTP nodes by monitoring the incoming protocol messages and dynamically adjusting the type of protocol messages the RSTP node transmits, as described below:

  - STP Mode – If the switch receives an 802.1D BPDU after a port's migration delay timer expires, the switch assumes it is connected to an 802.1D bridge and starts using only 802.1D BPDUs.

  - RSTP Mode – If RSTP is using 802.1D BPDUs on a port and receives an RSTP BPDU after the migration delay expires, RSTP restarts the migration delay timer and begins using RSTP BPDUs on that port.

- Multiple Spanning Tree Protocol

  - To allow multiple spanning trees to operate over the network, you must configure a related set of bridges with the same MSTP configuration, allowing them to participate in a specific set of spanning tree instances.

  - A spanning tree instance can exist only on bridges that have compatible VLAN instance assignments.

  - Be careful when switching between spanning tree modes. Changing modes stops all spanning-tree instances for the previous mode and restarts the system in the new mode, temporarily disrupting user traffic.

Example
The following example configures the switch to use Rapid Spanning Tree:

```
Console(config)#spanning-tree mode rstp
Console(config)#
```

spanning-tree mst configuration

This command changes to Multiple Spanning Tree (MST) configuration mode.

Default Setting

No VLANs are mapped to any MST instance.
The region name is set the switch's MAC address.

Command Mode

Global Configuration

Example

```
Console(config)#spanning-tree mst configuration
Console(config-mstp)#
```

Related Commands

mst vlan (430)
mst priority (429)
name (431)
revision (431)
max-hops (429)

spanning-tree pathcost method

This command configures the path cost method used for Rapid Spanning Tree and Multiple Spanning Tree. Use the **no** form to restore the default.

Syntax

spanning-tree pathcost method {**long** | **short**}

no spanning-tree pathcost method

long - Specifies 32-bit based values that range from 1-200,000,000.
This method is based on the IEEE 802.1w Rapid Spanning Tree Protocol.

short - Specifies 16-bit based values that range from 1-65535.
This method is based on the IEEE 802.1 Spanning Tree Protocol.

Default Setting

Long method

Command Mode

Global Configuration

Command Usage

- The path cost method is used to determine the best path between devices. Therefore, lower values should be assigned to ports attached to faster media, and higher values assigned to ports with slower media. Note that path cost (page 434) takes precedence over port priority (page 441).

- The path cost methods apply to all spanning tree modes (STP, RSTP and MSTP). Specifically, the long method can be applied to STP since this mode is supported by a backward compatible mode of RSTP.

Example

```
Console(config)#spanning-tree pathcost method long
Console(config)#
```

spanning-tree priority

This command configures the spanning tree priority globally for this switch. Use the **no** form to restore the default.

Syntax

spanning-tree priority *priority*

no spanning-tree priority

priority - Priority of the bridge. (Range – 0-61440, in steps of 4096; Options: 0, 4096, 8192, 12288, 16384, 20480, 24576, 28672, 32768, 36864, 40960, 45056, 49152, 53248, 57344, 61440)

Default Setting

32768

Command Mode

Global Configuration

Command Usage

Bridge priority is used in selecting the root device, root port, and designated port. The device with the highest priority (i.e., lower numeric value) becomes the STA root device. However, if all devices have the same priority, the device with the lowest MAC address will then become the root device.

Example

```
Console(config)#spanning-tree priority 40960
Console(config)#
```

spanning-tree system-bpdu-flooding

This command configures the system to flood BPDUs to all other ports on the switch or just to all other ports in the same VLAN when spanning tree is disabled globally on the switch or disabled on a specific port. Use the **no** form to restore the default.

Syntax

spanning-tree system-bpdu-flooding {**to-all** | **to-vlan**}

no spanning-tree system-bpdu-flooding

to-all - Floods BPDUs to all other ports on the switch.

to-vlan - Floods BPDUs to all other ports within the receiving port's native VLAN (i.e., as determined by port's PVID).

Default Setting

Floods to all other ports in the same VLAN.

Command Mode

Global Configuration

Command Usage

The **spanning-tree system-bpdu-flooding** command has no effect if BPDU flooding is disabled on a port (see the spanning-tree port-bpdu-flooding command).

Example

```
Console(config)#spanning-tree system-bpdu-flooding
Console(config)#
```

spanning-tree tc-prop

This command configures a topology change propagation domain. Use the **no** form to remove a propagation domain.

Syntax

spanning-tree tc-prop group *group-id* {**ethernet** *interface* | **port-channel** *trunk-id*}

group-id - Group identifier. (Range: 1-255)

interface - *unit/port*

unit - Unit identifier. (Range: 1)

port - Port number or list of ports. To enter a list, separate nonconsecutive port identifiers with a comma and no spaces; use a hyphen to designate a range of ports. (Range: 1-52)

trunk-id - Trunk index (Range: 1-8)

Default Setting
All ports and trunks belong to a common group.

Command Mode
Global Configuration

Command Usage
A port can only belong to one group. When an interface is added to a group, it is removed from the default group. When a TCN BPDU or BPDU with the TC flag set is received on an interface, that interface will only notify members in same group to propagate this topology change.

Example

```
Console(config)#spanning-tree tc-prop group 1 ethernet 1/1-5
Console(config)#
```

spanning-tree transmission-limit

This command configures the minimum interval between the transmission of consecutive RSTP/MSTP BPDUs. Use the **no** form to restore the default.

Syntax

spanning-tree transmission-limit *count*

no spanning-tree transmission-limit

count - The transmission limit in seconds. (Range: 1-10)

Default Setting
3

Command Mode
Global Configuration

Command Usage
This command limits the maximum transmission rate for BPDUs.

Example

```
Console(config)#spanning-tree transmission-limit 4
Console(config)#
```

max-hops

This command configures the maximum number of hops in the region before a BPDU is discarded. Use the **no** form to restore the default.

Syntax

max-hops *hop-number*

hop-number - Maximum hop number for multiple spanning tree. (Range: 1-40)

Default Setting

20

Command Mode

MST Configuration

Command Usage

An MSTI region is treated as a single node by the STP and RSTP protocols. Therefore, the message age for BPDUs inside an MSTI region is never changed. However, each spanning tree instance within a region, and the internal spanning tree (IST) that connects these instances use a hop count to specify the maximum number of bridges that will propagate a BPDU. Each bridge decrements the hop count by one before passing on the BPDU. When the hop count reaches zero, the message is dropped.

Example

```
Console(config-mstp)#max-hops 30
Console(config-mstp)#
```

mst priority

This command configures the priority of a spanning tree instance. Use the **no** form to restore the default.

Syntax

mst *instance-id* **priority** *priority*

no mst *instance-id* **priority**

instance-id - Instance identifier of the spanning tree. (Range: 0-4094)

priority - Priority of the a spanning tree instance.
(Range: 0-61440 in steps of 4096; Options: 0, 4096, 8192, 12288, 16384, 20480, 24576, 28672, 32768, 36864, 40960, 45056, 49152, 53248, 57344, 61440)

Default Setting

32768

Command Mode

MST Configuration

Command Usage

- MST priority is used in selecting the root bridge and alternate bridge of the specified instance. The device with the highest priority (i.e., lowest numerical value) becomes the MSTI root device. However, if all devices have the same priority, the device with the lowest MAC address will then become the root device.

- You can set this switch to act as the MSTI root device by specifying a priority of 0, or as the MSTI alternate device by specifying a priority of 16384.

Example

```
Console(config-mstp)#mst 1 priority 4096
Console(config-mstp)#
```

mst vlan

This command adds VLANs to a spanning tree instance. Use the **no** form to remove the specified VLANs. Using the **no** form without any VLAN parameters to remove all VLANs.

Syntax

[**no**] **mst** *instance-id* **vlan** *vlan-range*

instance-id - Instance identifier of the spanning tree. (Range: 0-4094)

vlan-range - Range of VLANs. (Range: 1-4094)

Default Setting

none

Command Mode

MST Configuration

Command Usage

- Use this command to group VLANs into spanning tree instances. MSTP generates a unique spanning tree for each instance. This provides multiple pathways across the network, thereby balancing the traffic load, preventing wide-scale disruption when a bridge node in a single instance fails, and allowing for faster convergence of a new topology for the failed instance.

- By default all VLANs are assigned to the Internal Spanning Tree (MSTI 0) that connects all bridges and LANs within the MST region. This switch supports up to 64 instances. You should try to group VLANs which cover the same general area of your network. However, remember that you must configure all bridges within the same MSTI Region (page 431) with the same set of instances, and the same instance (on each bridge) with the same set of VLANs. Also, note that RSTP treats each MSTI region as a single node, connecting all regions to the Common Spanning Tree.

Example

```
Console(config-mstp)#mst 1 vlan 2-5
Console(config-mstp)#
```

name

This command configures the name for the multiple spanning tree region in which this switch is located. Use the **no** form to clear the name.

Syntax

name *name*

name - Name of multiple spanning tree region. (Range: 1-32 alphanumeric characters)

Default Setting

Switch's MAC address

Command Mode

MST Configuration

Command Usage

The MST region name and revision number (page 431) are used to designate a unique MST region. A bridge (i.e., spanning-tree compliant device such as this switch) can only belong to one MST region. And all bridges in the same region must be configured with the same MST instances.

Example

```
Console(config-mstp)#name R&D
Console(config-mstp)#
```

Related Commands

revision (431)

revision

This command configures the revision number for this multiple spanning tree configuration of this switch. Use the **no** form to restore the default.

Syntax

revision *number*

number - Revision number of the spanning tree. (Range: 0-65535)

Default Setting

0

Command Mode

MST Configuration

Command Usage

The MST region name (page 431) and revision number are used to designate a unique MST region. A bridge (i.e., spanning-tree compliant device such as this switch) can only belong to one MST region. And all bridges in the same region must be configured with the same MST instances.

Example

```
Console(config-mstp)#revision 1
Console(config-mstp)#
```

Related Commands

name (431)

spanning-tree bpdu-filter

This command allows you to avoid transmitting BPDUs on configured edge ports that are connected to end nodes. Use the **no** form to disable this feature.

Syntax

[**no**] **spanning-tree bpdu-filter**

Default Setting

Disabled

Command Mode

Interface Configuration (Ethernet, Port Channel)

Command Usage

- This command stops all Bridge Protocol Data Units (BPDUs) from being transmitted on configured edge ports to save CPU processing time. This function is designed to work in conjunction with edge ports which should only connect end stations to the switch, and therefore do not need to process BPDUs. However, note that if a trunking port connected to another switch or bridging device is mistakenly configured as an edge port, and BPDU filtering is enabled on this port, this might cause a loop in the spanning tree.

- BPDU filter can only be configured on an interface if the edge port attribute is not disabled (that is, if edge port is set to enabled or auto with the spanning-tree edge-port command).

Example

```
Console(config)#interface ethernet 1/5
Console(config-if)#spanning-tree edge-port
Console(config-if)#spanning-tree bpdu-filter
Console(config-if)#
```

Related Commands

spanning-tree edge-port (435)

spanning-tree bpdu-guard

This command shuts down an edge port (i.e., an interface set for fast forwarding) if it receives a BPDU. Use the **no** form without any keywords to disable this feature, or with a keyword to restore the default settings.

Syntax

spanning-tree bpdu-guard [**auto-recovery** [**interval** *interval*]]

no spanning-tree bpdu-guard [**auto-recovery** [**interval**]]

auto-recovery - Automatically re-enables an interface after the specified interval.

interval - The time to wait before re-enabling an interface. (Range: 30-86400 seconds)

Default Setting

BPDU Guard: Disabled
Auto-Recovery: Disabled
Auto-Recovery Interval: 300 seconds

Command Mode

Interface Configuration (Ethernet, Port Channel)

Command Usage

- An edge port should only be connected to end nodes which do not generate BPDUs. If a BPDU is received on an edge port, this indicates an invalid network configuration, or that the switch may be under attack by a hacker. If an interface is shut down by BPDU Guard, it must be manually re-enabled using the no spanning-tree spanning-disabled command if the auto-recovery interval is not specified.

- BPDU guard can only be configured on an interface if the edge port attribute is not disabled (that is, if edge port is set to enabled or auto with the spanning-tree edge-port command).

Example

```
Console(config)#interface ethernet 1/5
Console(config-if)#spanning-tree edge-port
Console(config-if)#spanning-tree bpdu-guard
Console(config-if)#
```

Related Commands

spanning-tree edge-port (435)
spanning-tree spanning-disabled (443)

spanning-tree cost

This command configures the spanning tree path cost for the specified interface. Use the **no** form to restore the default auto-configuration mode.

Syntax

spanning-tree cost *cost*

no spanning-tree cost

cost - The path cost for the port. (Range: 0 for auto-configuration, 1-65535 for short path cost method, 1-200,000,000 for long path cost method)[9]

Table 87: Recommended STA Path Cost Range

Port Type	Short Path Cost (IEEE 802.1D-1998)	Long Path Cost (IEEE 802.1D-2004)
Ethernet	50-600	200,000-20,000,000
Fast Ethernet	10-60	20,000-2,000,000
Gigabit Ethernet	3-10	2,000-200,000
10G Ethernet	1-5	200-20,000

Default Setting

By default, the system automatically detects the speed and duplex mode used on each port, and configures the path cost according to the values shown below. Path cost "0" is used to indicate auto-configuration mode. When the short path cost method is selected and the default path cost recommended by the IEEE 8021w standard exceeds 65,535, the default is set to 65,535.

Table 88: Default STA Path Costs

Port Type	Short Path Cost (IEEE 802.1D-1998)	Long Path Cost (IEEE 802.1D-2004)
Ethernet	65,535	1,000,000
Fast Ethernet	65,535	100,000
Gigabit Ethernet	10,000	10,000
10G Ethernet	1,000	1,000

Command Mode

Interface Configuration (Ethernet, Port Channel)

Command Usage

- This command is used by the Spanning Tree Algorithm to determine the best path between devices. Therefore, lower values should be assigned to ports attached to faster media, and higher values assigned to ports with slower media.

9. Use the spanning-tree pathcost method command to set the path cost method. The range displayed in the CLI prompt message shows the maximum value for path cost. However, note that the switch still enforces the rules for path cost based on the specified path cost method (long or short).

- Path cost takes precedence over port priority.
- When the path cost method (page 425) is set to short, the maximum value for path cost is 65,535.

Example

```
Console(config)#interface ethernet 1/5
Console(config-if)#spanning-tree cost 50
Console(config-if)#
```

spanning-tree edge-port

This command specifies an interface as an edge port. Use the **no** form to restore the default.

Syntax

spanning-tree edge-port [**auto**]

no spanning-tree edge-port

auto - Automatically determines if an interface is an edge port.

Default Setting

Auto

Command Mode

Interface Configuration (Ethernet, Port Channel)

Command Usage

- You can enable this option if an interface is attached to a LAN segment that is at the end of a bridged LAN or to an end node. Since end nodes cannot cause forwarding loops, they can pass directly through to the spanning tree forwarding state. Specifying Edge Ports provides quicker convergence for devices such as workstations or servers, retains the current forwarding database to reduce the amount of frame flooding required to rebuild address tables during reconfiguration events, does not cause the spanning tree to initiate reconfiguration when the interface changes state, and also overcomes other STA-related time out problems. However, remember that Edge Port should only be enabled for ports connected to an end-node device.
- When edge port is set as auto, the operational state is determined automatically by the Bridge Detection State Machine described in 802.1D-2004, where the edge port state may change dynamically based on environment changes (e.g., receiving a BPDU or not within the required interval).

Example

```
Console(config)#interface ethernet 1/5
Console(config-if)#spanning-tree edge-port
Console(config-if)#
```

spanning-tree link-type

This command configures the link type for Rapid Spanning Tree and Multiple Spanning Tree. Use the **no** form to restore the default.

Syntax

spanning-tree link-type {**auto** | **point-to-point** | **shared**}

no spanning-tree link-type

auto - Automatically derived from the duplex mode setting.

point-to-point - Point-to-point link.

shared - Shared medium.

Default Setting

auto

Command Mode

Interface Configuration (Ethernet, Port Channel)

Command Usage

- Specify a point-to-point link if the interface can only be connected to exactly one other bridge, or a shared link if it can be connected to two or more bridges.
- When automatic detection is selected, the switch derives the link type from the duplex mode. A full-duplex interface is considered a point-to-point link, while a half-duplex interface is assumed to be on a shared link.
- RSTP only works on point-to-point links between two bridges. If you designate a port as a shared link, RSTP is forbidden. Since MSTP is an extension of RSTP, this same restriction applies.

Example

```
Console(config)#interface ethernet 1/5
Console(config-if)#spanning-tree link-type point-to-point
```

spanning-tree loopback-detection

This command enables the detection and response to Spanning Tree loopback BPDU packets on the port. Use the **no** form to disable this feature.

Syntax

[**no**] **spanning-tree loopback-detection**

Default Setting

Enabled

Command Mode

Interface Configuration (Ethernet, Port Channel)

Command Usage

- If Port Loopback Detection is not enabled and a port receives it's own BPDU, then the port will drop the loopback BPDU according to IEEE Standard 802.1W-2001 9.3.4 (Note 1).
- Port Loopback Detection will not be active if Spanning Tree is disabled on the switch.

Example

```
Console(config)#interface ethernet 1/5
Console(config-if)#spanning-tree loopback-detection
```

spanning-tree loopback-detection action

This command configures the response for loopback detection to shut down the interface. Use the **no** form to restore the default.

Syntax

spanning-tree loopback-detection action {**block** | **shutdown** *duration*}

no spanning-tree loopback-detection action

shutdown - Shuts down the interface.

duration - The duration to shut down the interface.
(Range: 60-86400 seconds)

Default Setting

shutdown, 60 seconds

Command Mode

Interface Configuration (Ethernet, Port Channel)

Command Usage

- If an interface is shut down by this command, and the release mode is set to "auto" with the spanning-tree loopback-detection release-mode command, the selected interface will be automatically enabled when the shutdown interval has expired.
- If an interface is shut down by this command, and the release mode is set to "manual," the interface can be re-enabled using the spanning-tree loopback-detection release command.

Example

```
Console(config)#interface ethernet 1/5
Console(config-if)#spanning-tree loopback-detection action shutdown 600
Console(config-if)#
```

spanning-tree loopback-detection release-mode

This command configures the release mode for a port that was placed in the discarding state because a loopback BPDU was received. Use the **no** form to restore the default.

Syntax

spanning-tree loopback-detection release-mode {**auto** | **manual**}

no spanning-tree loopback-detection release-mode

auto - Allows a port to automatically be released from the discarding state when the loopback state ends.

manual - The port can only be released from the discarding state manually.

Default Setting

auto

Command Mode

Interface Configuration (Ethernet, Port Channel)

Command Usage

- If the port is configured for automatic loopback release, then the port will only be returned to the forwarding state if one of the following conditions is satisfied:
  - The port receives any other BPDU except for it's own, or;
  - The port's link status changes to link down and then link up again, or;
  - The port ceases to receive it's own BPDUs in a forward delay interval.
- If Port Loopback Detection is not enabled and a port receives it's own BPDU, then the port will drop the loopback BPDU according to IEEE Standard 802.1W-2001 9.3.4 (Note 1).
- Port Loopback Detection will not be active if Spanning Tree is disabled on the switch.
- When configured for manual release mode, then a link down / up event will not release the port from the discarding state. It can only be released using the spanning-tree loopback-detection release command.

Example

```
Console(config)#interface ethernet 1/5
Console(config-if)#spanning-tree loopback-detection release-mode manual
Console(config-if)#
```

spanning-tree loopback-detection trap

This command enables SNMP trap notification for Spanning Tree loopback BPDU detections. Use the **no** form to restore the default.

Syntax

[**no**] **spanning-tree loopback-detection trap**

Default Setting

Disabled

Command Mode

Interface Configuration (Ethernet, Port Channel)

Example

```
Console(config)#interface ethernet 1/5
Console(config-if)#spanning-tree loopback-detection trap
```

spanning-tree mst cost

This command configures the path cost on a spanning instance in the Multiple Spanning Tree. Use the **no** form to restore the default auto-configuration mode.

Syntax

spanning-tree mst *instance-id* **cost** *cost*

no spanning-tree mst *instance-id* **cost**

instance-id - Instance identifier of the spanning tree. (Range: 0-4094)

cost - Path cost for an interface. (Range: 0 for auto-configuration, 1-65535 for short path cost method[10], 1-200,000,000 for long path cost method)

The recommended path cost range is listed in Table 87 on page 434.

Default Setting

By default, the system automatically detects the speed and duplex mode used on each port, and configures the path cost according to the values shown below. Path cost "0" is used to indicate auto-configuration mode. When the short path cost method is selected and the default path cost recommended by the IEEE 8021w standard exceeds 65,535, the default is set to 65,535. The default path costs are listed in Table 88 on page 434.

Command Mode

Interface Configuration (Ethernet, Port Channel)

Command Usage

- Each spanning-tree instance is associated with a unique set of VLAN IDs.
- This command is used by the multiple spanning-tree algorithm to determine the best path between devices. Therefore, lower values should be assigned to

10. Use the spanning-tree pathcost method command to set the path cost method.

interfaces attached to faster media, and higher values assigned to interfaces with slower media.

- Use the **no spanning-tree mst cost** command to specify auto-configuration mode.

- Path cost takes precedence over interface priority.

Example

```
Console(config)#interface Ethernet 1/5
Console(config-if)#spanning-tree mst 1 cost 50
Console(config-if)#
```

Related Commands

spanning-tree mst port-priority (440)

spanning-tree mst port-priority

This command configures the interface priority on a spanning instance in the Multiple Spanning Tree. Use the **no** form to restore the default.

Syntax

spanning-tree mst *instance-id* **port-priority** *priority*

no spanning-tree mst *instance-id* port-priority

instance-id - Instance identifier of the spanning tree. (Range: 0-4094)

priority - Priority for an interface. (Range: 0-240 in steps of 16)

Default Setting

128

Command Mode

Interface Configuration (Ethernet, Port Channel)

Command Usage

- This command defines the priority for the use of an interface in the multiple spanning-tree. If the path cost for all interfaces on a switch are the same, the interface with the highest priority (that is, lowest value) will be configured as an active link in the spanning tree.

- Where more than one interface is assigned the highest priority, the interface with lowest numeric identifier will be enabled.

Example

```
Console(config)#interface ethernet 1/5
Console(config-if)#spanning-tree mst 1 port-priority 0
Console(config-if)#
```

Related Commands
spanning-tree mst cost (439)

spanning-tree port-bpdu-flooding

This command floods BPDUs to other ports when spanning tree is disabled globally or disabled on a specific port. Use the **no** form to restore the default setting.

Syntax

[**no**] **spanning-tree port-bpdu-flooding**

Default Setting
Enabled

Command Mode
Interface Configuration (Ethernet, Port Channel)

Command Usage
- When enabled, BPDUs are flooded to all other ports on the switch or to all other ports within the receiving port's native VLAN as specified by the spanning-tree system-bpdu-flooding command.
- The spanning-tree system-bpdu-flooding command has no effect if BPDU flooding is disabled on a port by the **spanning-tree port-bpdu-flooding** command.

Example

```
Console(config)#interface ethernet 1/5
Console(config-if)#spanning-tree port-bpdu-flooding
Console(config-if)#
```

spanning-tree port-priority

This command configures the priority for the specified interface. Use the **no** form to restore the default.

Syntax

spanning-tree port-priority *priority*

no spanning-tree port-priority

priority - The priority for a port. (Range: 0-240, in steps of 16)

Default Setting
128

Command Mode
Interface Configuration (Ethernet, Port Channel)

Command Usage

- This command defines the priority for the use of a port in the Spanning Tree Algorithm. If the path cost for all ports on a switch are the same, the port with the highest priority (that is, lowest value) will be configured as an active link in the spanning tree.
- Where more than one port is assigned the highest priority, the port with lowest numeric identifier will be enabled.
- The criteria used for determining the port role is based on root bridge ID, root path cost, designated bridge, designated port, port priority, and port number, in that order and as applicable to the role under question.

Example

```
Console(config)#interface ethernet 1/5
Console(config-if)#spanning-tree port-priority 0
```

Related Commands

spanning-tree cost (434)

spanning-tree root-guard

This command prevents a designated port from taking superior BPDUs into account and allowing a new STP root port to be elected. Use the **no** form to disable this feature.

Syntax

[**no**] **spanning-tree root-guard**

Default Setting

Disabled

Command Mode

Interface Configuration (Ethernet, Port Channel)

Command Usage

- A bridge with a lower bridge identifier (or same identifier and lower MAC address) can take over as the root bridge at any time.
- When Root Guard is enabled, and the switch receives a superior BPDU on this port, it is set to the Discarding state until it stops receiving superior BPDUs for a fixed recovery period. While in the discarding state, no traffic is forwarded across the port.
- Root Guard can be used to ensure that the root bridge is not formed at a suboptimal location. Root Guard should be enabled on any designated port connected to low-speed bridges which could potentially overload a slower link by taking over as the root port and forming a new spanning tree topology. It

could also be used to form a border around part of the network where the root bridge is allowed.

- When spanning tree is initialized globally on the switch or on an interface, the switch will wait for 20 seconds to ensure that the spanning tree has converged before enabling Root Guard.

Example

```
Console(config)#interface ethernet 1/5
Console(config-if)#spanning-tree edge-port
Console(config-if)#spanning-tree root-guard
Console(config-if)#
```

spanning-tree spanning-disabled

This command disables the spanning tree algorithm for the specified interface. Use the **no** form to re-enable the spanning tree algorithm for the specified interface.

Syntax

[**no**] **spanning-tree spanning-disabled**

Default Setting

Enabled

Command Mode

Interface Configuration (Ethernet, Port Channel)

Command Usage

When spanning tree is enabled globally (spanning-tree command) or enabled on an interface by this command, loopback detection is disabled.

Example

This example disables the spanning tree algorithm for port 5.

```
Console(config)#interface ethernet 1/5
Console(config-if)#spanning-tree spanning-disabled
Console(config-if)#
```

spanning-tree tc-prop-stop

This command stops the propagation of topology change notifications (TCN). Use the **no** form to allow propagation of TCN messages.

Syntax

[**no**] **spanning-tree tc-prop-stop**

Default Setting

Disabled

Command Mode
Interface Configuration (Ethernet, Port Channel)

Command Usage
When this command is enabled on an interface, topology change information originating from the interface will still be propagated.

This command should not be used on an interface which is purposely configured in a ring topology.

Example

```
Console(config)#interface ethernet 1/1
Console(config-if)#spanning-tree tc-prop-stop
Console(config-if)#
```

spanning-tree loopback-detection release

This command manually releases a port placed in discarding state by loopback-detection.

Syntax

spanning-tree loopback-detection release *interface*

interface

ethernet *unit/port*

unit - Unit identifier. (Range: 1)

port - Port number. (Range: 1-52)

port-channel *channel-id* (Range: 1-8)

Command Mode
Privileged Exec

Command Usage
Use this command to release an interface from discarding state if loopback detection release mode is set to “manual” by the spanning-tree loopback-detection release-mode command and BPDU loopback occurs.

Example

```
Console#spanning-tree loopback-detection release ethernet 1/1
Console#
```

spanning-tree protocol-migration

This command re-checks the appropriate BPDU format to send on the selected interface.

Syntax

spanning-tree protocol-migration *interface*

interface

ethernet *unit/port*

unit - Unit identifier. (Range: 1)

port - Port number. (Range: 1-52)

port-channel *channel-id* (Range: 1-8)

Command Mode

Privileged Exec

Command Usage

If at any time the switch detects STP BPDUs, including Configuration or Topology Change Notification BPDUs, it will automatically set the selected interface to forced STP-compatible mode. However, you can also use the **spanning-tree protocol-migration** command at any time to manually re-check the appropriate BPDU format to send on the selected interfaces (i.e., RSTP or STP-compatible).

Example

```
Console#spanning-tree protocol-migration ethernet 1/5
Console#
```

show spanning-tree

This command shows the configuration for the common spanning tree (CST), for all instances within the multiple spanning tree (MST), or for a specific instance within the multiple spanning tree (MST).

Syntax

show spanning-tree [*interface* | **mst** *instance-id* | **brief** | **stp-enabled-only**]

interface

ethernet *unit/port*

unit - Unit identifier. (Range: 1)

port - Port number. (Range: 1-52)

port-channel *channel-id* (Range: 1-8)

instance-id - Instance identifier of the multiple spanning tree. (Range: 0-4094)

brief - Shows a summary of global and interface settings.

stp-enabled-only - Displays global settings, and settings for interfaces for which STP is enabled.

Default Setting
None

Command Mode
Privileged Exec

Command Usage
- Use the **show spanning-tree** command with no parameters to display the spanning tree configuration for the switch for the Common Spanning Tree (CST) and for every interface in the tree.
- Use the **show spanning-tree** *interface* command to display the spanning tree configuration for an interface within the Common Spanning Tree (CST).
- Use the **show spanning-tree mst** command to display the spanning tree configuration for all instances within the Multiple Spanning Tree (MST), including global settings and settings for active interfaces.
- Use the **show spanning-tree mst** *instance-id* command to display the spanning tree configuration for an instance within the Multiple Spanning Tree (MST), including global settings and settings for all interfaces.

Example

```
Console#show spanning-tree
Spanning Tree Information
---------------------------------------------------------------
 Spanning Tree Mode              : MSTP
 Spanning Tree Enabled/Disabled  : Enabled
 Instance                        : 0
 VLANs Configured                : 1-4094
 Priority                        : 32768
 Bridge Hello Time (sec.)        : 2
 Bridge Max. Age (sec.)          : 20
 Bridge Forward Delay (sec.)     : 15
 Root Hello Time (sec.)          : 2
 Root Max. Age (sec.)            : 20
 Root Forward Delay (sec.)       : 15
 Max. Hops                       : 20
 Remaining Hops                  : 20
 Designated Root                 : 32768.0.0001ECF8D8C6
 Current Root Port               : 21
 Current Root Cost               : 100000
 Number of Topology Changes      : 5
 Last Topology Change Time (sec.): 11409
 Transmission Limit              : 3
 Path Cost Method                : Long
 Flooding Behavior               : To VLAN
 Cisco Prestandard               : Disabled
---------------------------------------------------------------
Eth  1/ 1 Information
---------------------------------------------------------------
 Admin Status                      : Enabled
 Role                              : Disabled
```

```
 State                              : Discarding
 External Admin Path Cost           : 0
 Internal Admin Path Cost           : 0
 External Oper Path Cost            : 100000
 Internal Oper Path Cost            : 100000
 Priority                           : 128
 Designated Cost                    : 100000
 Designated Port                    : 128.1
 Designated Root                    : 32768.0.0001ECF8D8C6
 Designated Bridge                  : 32768.0.123412341234
 Forward Transitions                : 4
 Admin Edge Port                    : Disabled
 Oper Edge Port                     : Disabled
 Admin Link Type                    : Auto
 Oper Link Type                     : Point-to-point
 Flooding Behavior                  : Enabled
 Spanning-Tree Status               : Enabled
 Loopback Detection Status          : Enabled
 Loopback Detection Release Mode    : Auto
 Loopback Detection Trap            : Disabled
 Loopback Detection Action          : Block
 Root Guard Status                  : Disabled
 BPDU Guard Status                  : Disabled
 BPDU Guard Auto Recovery           : Disabled
 BPDU Guard Auto Recovery Interval  : 300
 BPDU Filter Status                 : Disabled
 TC Propagate Stop                  : Disabled

.
.
.
```

This example shows a brief summary of global and interface setting for the spanning tree.

```
Console#show spanning-tree brief
Spanning Tree Mode              : RSTP
Spanning Tree Enabled/Disabled : Enabled
Designated Root                 : 32768.0000E8944000
Current Root Port (Eth)         : 1/24
Current Root Cost               : 10000

Interface Pri Designated            Designated Oper     STP    Role State Oper
              Bridge ID             Port ID    Cost     Status            Edge
--------- --- --------------------- ---------- -------- ------ ---- ----- ---
Eth 1/ 1  128 32768.0000E89382A0    128.1        100000 EN     DESG FWD   No
Eth 1/ 2  128 32768.0000E89382A0    128.2         10000 EN     DISB BLK   No
Eth 1/ 3  128 32768.0000E89382A0    128.3         10000 EN     DISB BLK   No
Eth 1/ 4  128 32768.0000E89382A0    128.4         10000 EN     DISB BLK   No
Eth 1/ 5  128 32768.0000E89382A0    128.5         10000 EN     DISB BLK   No
.
.
.
```

show spanning-tree mst configuration

This command shows the configuration of the multiple spanning tree.

Command Mode

Privileged Exec

Example

```
Console#show spanning-tree mst configuration
Mstp Configuration Information
-------------------------------------------------------------
 Configuration Name : R&D
 Revision Level     :0

 Instance VLANs
-------------------------------------------------------------
     0    1-4094
Console#
```

show spanning-tree tc-prop

This command shows the configuration of topology change propagation domains.

Syntax

show spanning-tree tc-prop [group *group-id*]

group-id - Group identifier. (Range: 1-255)

Command Mode

Privileged Exec

Example

```
Console#show spanning-tree tc-prop group 1
 Group 1
  Eth 1/ 1, Eth 1/ 2, Eth 1/ 3, Eth 1/ 4, Eth 1/ 5
Console#
```

18 VLAN Commands

A VLAN is a group of ports that can be located anywhere in the network, but communicate as though they belong to the same physical segment. This section describes commands used to create VLAN groups, add port members, and specify how VLAN tagging is used for the selected interface.

Table 89: VLAN Commands

Command Group	Function
Editing VLAN Groups	Sets up VLAN groups, including name, VID and state
Configuring VLAN Interfaces	Configures VLAN interface parameters, including ingress and egress tagging mode, ingress filtering, and PVID
Displaying VLAN Information	Displays VLAN groups, status, port members, and MAC addresses
Configuring IEEE 802.1Q Tunneling	Configures 802.1Q Tunneling (QinQ Tunneling)
Configuring Protocol-based VLANs*	Configures protocol-based VLANs based on frame type and protocol
Configuring MAC Based VLANs*	Configures MAC-based VLANs
Configuring Voice VLANs	Configures VoIP traffic detection and enables a Voice VLAN

* If a packet matches the rules defined by more than one of these functions, only one of them is applied, with the precedence being MAC-based, protocol-based, and then native port-based (see the switchport priority default command).

Editing VLAN Groups

Table 90: Commands for Editing VLAN Groups

Command	Function	Mode
vlan database	Enters VLAN database mode to add, change, and delete VLANs	GC
vlan	Configures a VLAN, including VID, name and state	VC

vlan database

This command enters VLAN database mode. All commands in this mode will take effect immediately.

Default Setting

None

Command Mode
Global Configuration

Command Usage
- Use the VLAN database command mode to add, change, and delete VLANs. After finishing configuration changes, you can display the VLAN settings by entering the show vlan command.

- Use the interface vlan command mode to define the port membership mode and add or remove ports from a VLAN. The results of these commands are written to the running-configuration file, and you can display this file by entering the show running-config command.

Example

```
Console(config)#vlan database
Console(config-vlan)#
```

Related Commands
show vlan (457)

vlan

This command configures a VLAN. Use the **no** form to restore the default settings or delete a VLAN.

Syntax

vlan *vlan-id* [**name** *vlan-name*] **media ethernet** [**state** {**active** | **suspend**}] [**rspan**]

no vlan *vlan-id* [**name** | **state**]

vlan-id - VLAN ID, specified as a single number, a range of consecutive numbers separated by a hyphen, or multiple numbers separated by commas. (Range: 1-4094)

name - Keyword to be followed by the VLAN name.

vlan-name - ASCII string from 1 to 32 characters.

media ethernet - Ethernet media type.

state - Keyword to be followed by the VLAN state.

active - VLAN is operational.

suspend - VLAN is suspended. Suspended VLANs do not pass packets.

rspan - Keyword to create a VLAN used for mirroring traffic from remote switches. The VLAN used for RSPAN cannot include VLAN 1 (the switch's default VLAN). Nor should it include VLAN 4093 (which is used for switch clustering). Configuring VLAN 4093 for other purposes may cause problems in the Clustering operation. For more information on configuring RSPAN through the CLI, see "RSPAN Mirroring Commands" on page 395.

Default Setting
By default only VLAN 1 exists and is active.

Command Mode
VLAN Database Configuration

Command Usage
- **no vlan** *vlan-id* deletes the VLAN.
- **no vlan** *vlan-id* **name** removes the VLAN name.
- **no vlan** *vlan-id* **state** returns the VLAN to the default state (i.e., active).
- You can configure up to 4094 VLANs on the switch.

Example
The following example adds a VLAN, using VLAN ID 105 and name RD5. The VLAN is activated by default.

```
Console(config)#vlan database
Console(config-vlan)#vlan 105 name RD5 media ethernet
Console(config-vlan)#
```

Related Commands
show vlan (457)

Configuring VLAN Interfaces

Table 91: Commands for Configuring VLAN Interfaces

Command	Function	Mode
interface vlan	Enters interface configuration mode for a specified VLAN	IC
switchport acceptable-frame-types	Configures frame types to be accepted by an interface	IC
switchport allowed vlan	Configures the VLANs associated with an interface	IC
switchport ingress-filtering	Enables ingress filtering on an interface	IC
switchport mode	Configures VLAN membership mode for an interface	IC
switchport native vlan	Configures the PVID (native VLAN) of an interface	IC
switchport priority default	Sets a port priority for incoming untagged frames	IC

interface vlan

This command enters interface configuration mode for VLANs, which is used to configure VLAN parameters for a physical interface. Use the **no** form to change a Layer 3 normal VLAN back to a Layer 2 interface.

Syntax

[**no**] **interface vlan** *vlan-id*

vlan-id - ID of the configured VLAN. (Range: 1-4094)

Default Setting

None

Command Mode

Global Configuration

Command Usage

- Creating a "normal" VLAN with the vlan command initializes it as a Layer 2 interface. To change it to a Layer 3 interface, use the interface command to enter interface configuration for the desired VLAN, enter any Layer 3 configuration commands, and save the configuration settings.

- To change a Layer 3 normal VLAN back to a Layer 2 VLAN, use the no interface command.

Example

The following example shows how to set the interface configuration mode to VLAN 1, and then assign an IP address to the VLAN:

```
Console(config)#interface vlan 1
Console(config-if)#ip address 192.168.1.254 255.255.255.0
Console(config-if)#
```

Related Commands

shutdown (356)
interface (350)
vlan (450)

switchport acceptable-frame-types

This command configures the acceptable frame types for a port. Use the **no** form to restore the default.

Syntax

switchport acceptable-frame-types {**all** | **tagged**}

no switchport acceptable-frame-types

all - The port accepts all frames, tagged or untagged.

tagged - The port only receives tagged frames.

Default Setting
All frame types

Command Mode
Interface Configuration (Ethernet, Port Channel)

Command Usage
When set to receive all frame types, any received frames that are untagged are assigned to the default VLAN.

Example
The following example shows how to restrict the traffic received on port 1 to tagged frames:

```
Console(config)#interface ethernet 1/1
Console(config-if)#switchport acceptable-frame-types tagged
Console(config-if)#
```

Related Commands
switchport mode (455)

switchport allowed vlan

This command configures VLAN groups on the selected interface. Use the **no** form to restore the default.

Syntax

switchport allowed vlan {*vlan-list* | **add** *vlan-list* [**tagged** | **untagged**] | **remove** *vlan-list*}

no switchport allowed vlan

vlan-list - If a VLAN list is entered without using the **add** option, the interface is assigned to the specified VLANs, and membership in all previous VLANs is removed. The interface is added as a tagged member if switchport mode is set to hybrid or access, or as an untagged member if switchport mode is set to trunk.

Separate nonconsecutive VLAN identifiers with a comma and no spaces; use a hyphen to designate a range of IDs. (Range: 1-4094).

add *vlan-list* - List of VLAN identifiers to add. When the **add** option is used, the interface is assigned to the specified VLANs, and membership in all previous VLANs is retained.

remove *vlan-list* - List of VLAN identifiers to remove.

Default Setting
All ports are assigned to VLAN 1 by default.
The default frame type is untagged.

Command Mode
Interface Configuration (Ethernet, Port Channel)

Command Usage
- If a port or trunk has switchport mode set to **access**, then only one VLAN can be added with this command. If a VLAN list is specified, only the last VLAN in the list will be added to the interface.
- A port, or a trunk with switchport mode set to **hybrid**, must be assigned to at least one VLAN as untagged.
- If a trunk has switchport mode set to **trunk** (i.e., 1Q Trunk), then you can only assign an interface to VLAN groups as a tagged member.
- Frames are always tagged within the switch. The tagged/untagged parameter used when adding a VLAN to an interface tells the switch whether to keep or remove the tag from a frame on egress.
- If none of the intermediate network devices nor the host at the other end of the connection supports VLANs, the interface should be added to these VLANs as an untagged member. Otherwise, it is only necessary to add at most one VLAN as untagged, and this should correspond to the native VLAN for the interface.
- If a VLAN on the forbidden list for an interface is manually added to that interface, the VLAN is automatically removed from the forbidden list for that interface.

Example
The following example shows how to add VLANs 1, 2, 5 and 6 to the allowed list as tagged VLANs for port 1:

```
Console(config)#interface ethernet 1/1
Console(config-if)#switchport allowed vlan add 1,2,5,6 tagged
Console(config-if)#
```

switchport ingress-filtering

This command enables ingress filtering for an interface. Use the **no** form to restore the default.

Syntax

[**no**] **switchport ingress-filtering**

Default Setting
Enabled

Command Mode
Interface Configuration (Ethernet, Port Channel)

Command Usage

- Ingress filtering only affects tagged frames.
- If ingress filtering is disabled and a port receives frames tagged for VLANs for which it is not a member, these frames will be flooded to all other ports (except for those VLANs explicitly forbidden on this port).
- If ingress filtering is enabled and a port receives frames tagged for VLANs for which it is not a member, these frames will be discarded.
- Ingress filtering does not affect VLAN independent BPDU frames, such as STA. However, they do affect VLAN dependent BPDU frames, such as GMRP.

Example

The following example shows how to set the interface to port 1 and then enable ingress filtering:

```
Console(config)#interface ethernet 1/1
Console(config-if)#switchport ingress-filtering
Console(config-if)#
```

switchport mode

This command configures the VLAN membership mode for a port. Use the **no** form to restore the default.

Syntax

switchport mode {**access** | **hybrid** | **trunk**}

no switchport mode

access - Specifies an access VLAN interface. The port transmits and receives untagged frames on a single VLAN only.

hybrid - Specifies a hybrid VLAN interface. The port may transmit tagged or untagged frames.

trunk - Specifies a port as an end-point for a VLAN trunk. A trunk is a direct link between two switches, so the port transmits tagged frames that identify the source VLAN. Note that frames belonging to the port's default VLAN (i.e., associated with the PVID) are also transmitted as tagged frames.

Default Setting

Hybrid mode, with the PVID set to VLAN 1.

Command Mode

Interface Configuration (Ethernet, Port Channel)

Example

The following shows how to set the configuration mode to port 1, and then set the switchport mode to hybrid:

```
Console(config)#interface ethernet 1/1
Console(config-if)#switchport mode hybrid
Console(config-if)#
```

Related Commands

switchport acceptable-frame-types (452)

switchport native vlan

This command configures the PVID (i.e., default VLAN ID) for a port. Use the **no** form to restore the default.

Syntax

switchport native vlan *vlan-id*

no switchport native vlan

vlan-id - Default VLAN ID for a port. (Range: 1-4094)

Default Setting

VLAN 1

Command Mode

Interface Configuration (Ethernet, Port Channel)

Command Usage

- When using Access mode, and an interface is assigned to a new VLAN, its PVID is automatically set to the identifier for that VLAN. When using Hybrid mode, the PVID for an interface can be set to any VLAN for which it is an untagged member.

- If acceptable frame types is set to **all** or switchport mode is set to **hybrid**, the PVID will be inserted into all untagged frames entering the ingress port.

Example

The following example shows how to set the PVID for port 1 to VLAN 3:

```
Console(config)#interface ethernet 1/1
Console(config-if)#switchport native vlan 3
Console(config-if)#
```

Displaying VLAN Information

This section describes commands used to display VLAN information.

Table 92: Commands for Displaying VLAN Information

Command	Function	Mode
show interfaces status vlan	Displays status for the specified VLAN interface	NE, PE
show interfaces switchport	Displays the administrative and operational status of an interface	NE, PE
show vlan	Shows VLAN information	NE, PE

show vlan

This command shows VLAN information.

Syntax

show vlan [**id** *vlan-id* | **name** *vlan-name*]

id - Keyword to be followed by the VLAN ID.

vlan-id - ID of the configured VLAN. (Range: 1-4094)

name - Keyword to be followed by the VLAN name.

vlan-name - ASCII string from 1 to 32 characters.

Default Setting

Shows all VLANs.

Command Mode

Normal Exec, Privileged Exec

Example

The following example shows how to display information for VLAN 1:

```
Console#show vlan id 1

VLAN ID:                1
Type:                   Static
Name:                   DefaultVlan
Status:                 Active
Ports/Port Channels : Eth1/ 1(S) Eth1/ 2(S) Eth1/ 3(S) Eth1/ 4(S) Eth1/ 5(S)
                      Eth1/ 6(S) Eth1/ 7(S) Eth1/ 8(S) Eth1/ 9(S) Eth1/10(S)
                      Eth1/11(S) Eth1/12(S) Eth1/13(S) Eth1/14(S) Eth1/15(S)
                      Eth1/16(S) Eth1/17(S) Eth1/18(S) Eth1/19(S) Eth1/20(S)
                      Eth1/21(S) Eth1/22(S) Eth1/23(S) Eth1/24(S) Eth1/25(S)
                      Eth1/26(S) Eth1/27(S) Eth1/28(S) Eth1/29(S) Eth1/30(S)
                      Eth1/31(S) Eth1/32(S) Eth1/33(S) Eth1/34(S) Eth1/35(S)
                      Eth1/36(S) Eth1/37(S) Eth1/38(S) Eth1/39(S) Eth1/40(S)
                      Eth1/41(S) Eth1/42(S) Eth1/43(S) Eth1/44(S) Eth1/45(S)
                      Eth1/46(S) Eth1/47(S) Eth1/48(S) Eth1/49(S) Eth1/50(S)
                      Eth1/51(S) Eth1/52(S)
Console#
```

Configuring IEEE 802.1Q Tunneling

IEEE 802.1Q tunneling (QinQ tunneling) uses a single Service Provider VLAN (SPVLAN) for customers who have multiple VLANs. Customer VLAN IDs are preserved and traffic from different customers is segregated within the service provider's network even when they use the same customer-specific VLAN IDs. QinQ tunneling expands VLAN space by using a VLAN-in-VLAN hierarchy, preserving the customer's original tagged packets, and adding SPVLAN tags to each frame (also called double tagging).

This section describes commands used to configure QinQ tunneling.

Table 93: 802.1Q Tunneling Commands

Command	Function	Mode
dot1q-tunnel system-tunnel-control	Configures the switch to operate in normal mode or QinQ mode	GC
switchport dot1q-tunnel mode	Configures an interface as a QinQ tunnel port	IC
switchport dot1q-tunnel priority map	Copies inner tag priority to outer tag priority	IC
switchport dot1q-tunnel service match cvid	Creates a CVLAN to SPVLAN mapping entry	IC
switchport dot1q-tunnel tpid	Sets the Tag Protocol Identifier (TPID) value of a tunnel port	IC
show dot1q-tunnel	Displays the configuration of QinQ tunnel ports	PE
show interfaces switchport	Displays port QinQ operational status	PE

General Configuration Guidelines for QinQ

1. Configure the switch to QinQ mode (dot1q-tunnel system-tunnel-control).
2. Create a SPVLAN (vlan).
3. Configure the QinQ tunnel access port to dot1Q-tunnel access mode (switchport dot1q-tunnel mode).
4. Set the Tag Protocol Identifier (TPID) value of the tunnel access port. This step is required if the attached client is using a nonstandard 2-byte ethertype to identify 802.1Q tagged frames. The standard ethertype value is 0x8100. (See switchport dot1q-tunnel tpid.)
5. Configure the QinQ tunnel access port to join the SPVLAN as an untagged member (switchport allowed vlan).
6. Configure the SPVLAN ID as the native VID on the QinQ tunnel access port (switchport native vlan).

7. Configure the QinQ tunnel uplink port to dot1Q-tunnel uplink mode (switchport dot1q-tunnel mode).

8. Configure the QinQ tunnel uplink port to join the SPVLAN as a tagged member (switchport allowed vlan).

Limitations for QinQ

- The native VLAN for the tunnel uplink ports and tunnel access ports cannot be the same. However, the same service VLANs can be set on both tunnel port types.
- IGMP Snooping should not be enabled on a tunnel access port.
- If the spanning tree protocol is enabled, be aware that a tunnel access or tunnel uplink port may be disabled if the spanning tree structure is automatically reconfigured to overcome a break in the tree. It is therefore advisable to disable spanning tree on these ports.

dot1q-tunnel system-tunnel-control

This command sets the switch to operate in QinQ mode. Use the **no** form to disable QinQ operating mode.

Syntax

[**no**] **dot1q-tunnel system-tunnel-control**

Default Setting

Disabled

Command Mode

Global Configuration

Command Usage

QinQ tunnel mode must be enabled on the switch for QinQ interface settings to be functional.

Example

```
Console(config)#dot1q-tunnel system-tunnel-control
Console(config)#
```

Related Commands

show dot1q-tunnel (464)
show interfaces switchport (365)

switchport dot1q-tunnel mode

This command configures an interface as a QinQ tunnel port. Use the **no** form to disable QinQ on the interface.

Syntax

switchport dot1q-tunnel mode {**access** | **uplink**}

no switchport dot1q-tunnel mode

access – Sets the port as an 802.1Q tunnel access port.

uplink – Sets the port as an 802.1Q tunnel uplink port.

Default Setting

Disabled

Command Mode

Interface Configuration (Ethernet, Port Channel)

Command Usage

- QinQ tunneling must be enabled on the switch using the dot1q-tunnel system-tunnel-control command before the **switchport dot1q-tunnel mode** interface command can take effect.
- When a tunnel uplink port receives a packet from a customer, the customer tag (regardless of whether there are one or more tag layers) is retained in the inner tag, and the service provider's tag added to the outer tag.
- When a tunnel uplink port receives a packet from the service provider, the outer service provider's tag is stripped off, and the packet passed on to the VLAN indicated by the inner tag. If no inner tag is found, the packet is passed onto the native VLAN defined for the uplink port.

Example

```
Console(config)#interface ethernet 1/1
Console(config-if)#switchport dot1q-tunnel mode access
Console(config-if)#
```

Related Commands

show dot1q-tunnel (464)
show interfaces switchport (365)

switchport dot1q-tunnel priority map

This command copies the inner tag priority to the outer tag priority. Use the **no** form to disable this feature.

Syntax

[**no**] **switchport dot1q-tunnel priority map**

Default Setting
Disabled

Command Mode
Interface Configuration (Ethernet, Port Channel)

Command Usage
When priority bits are found in the inner tag, these are also copied to the outer tag. This allows the service provider to differentiate service based on the indicated priority and appropriate methods of queue management at intermediate nodes across the tunnel.

Example

```
Console(config)#interface ethernet 1/1
Console(config-if)#switchport dot1q-tunnel priority map
Console(config-if)#
```

switchport dot1q-tunnel service match cvid

This command creates a CVLAN to SPVLAN mapping entry. Use the **no** form to delete a VLAN mapping entry.

Syntax

switchport dot1q-tunnel service *svid* **match cvid** *cvid*

svid - VLAN ID for the outer VLAN tag (Service Provider VID). (Range: 1-4094)

cvid - VLAN ID for the inner VLAN tag (Customer VID). (Range: 1-4094)

Default Setting
Default mapping uses the PVID of the ingress port on the edge router for the SPVID.

Command Mode
Interface Configuration (Ethernet, Port Channel)

Command Usage
- The inner VLAN tag of a customer packet entering the edge router of a service provider's network is mapped to an outer tag indicating the service provider VLAN that will carry this traffic across the 802.1Q tunnel. This process is performed in a transparent manner.

- When priority bits are found in the inner tag, these are also copied to the outer tag. This allows the service provider to differentiate service based on the indicated priority and appropriate methods of queue management at intermediate nodes across the tunnel.

- Rather than relying on standard service paths and priority queuing, QinQ VLAN mapping can be used to further enhance service by defining a set of differentiated service pathways to follow across the service provider's network for traffic arriving from specified inbound customer VLANs.

- Note that all customer interfaces should be configured as access interfaces (that is, a user-to-network interface) and service provider interfaces as uplink interfaces (that is, a network-to-network interface). Use the switchport dot1q-tunnel mode uplink command to set an interface to access or uplink mode.

Example

This example sets the SVID to 99 in the outer tag for egress packets exiting port 1 when the packet's CVID is 2.

```
Console(config)#interface ethernet 1/1
Console(config-if)#switchport dot1q-tunnel service 99 match cvid 2
Console(config-if)#
```

The following example maps C-VLAN 10 to S-VLAN 100, C-VLAN 20 to S-VLAN 200 and C-VLAN 30 to S-VLAN 300 for ingress traffic on port 1 of Switches A and B.

Figure 1: Mapping QinQ Service VLAN to Customer VLAN

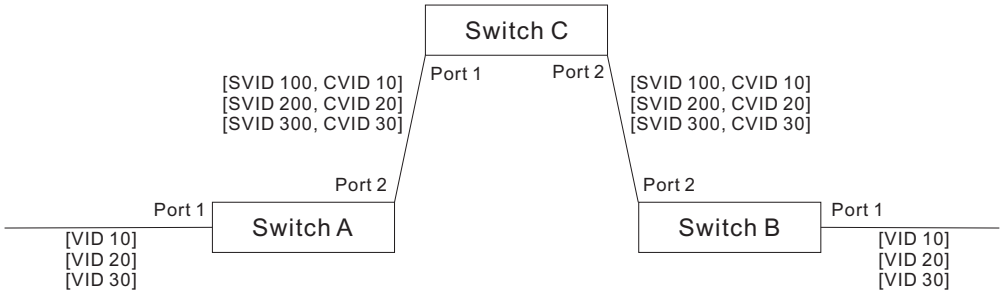

Step 1. Configure Switch A and B.

1. Create VLANs 100, 200 and 300.

```
Console(config)#vlan database
Console(config-vlan)#vlan 100,200,300 media ethernet state active
```

2. Enable QinQ.

```
Console(config)#dot1q-tunnel system-tunnel-control
```

3. Configure port 2 as a tagged member of VLANs 100, 200 and 300 using uplink mode.

```
Console(config)#interface ethernet 1/2
Console(config-if)#switchport allowed vlan add 100,200,300 tagged
Console(config-if)#switchport dot1q-tunnel mode uplink
```

4. Configures port 1 as an untagged member of VLANs 100, 200 and 300 using access mode.

```
Console(config)#interface ethernet 1/1
Console(config-if)#switchport allowed vlan add 100,200,300 untagged
Console(config-if)#switchport dot1q-tunnel mode access
```

5. Configure the following selective QinQ mapping entries.

```
Console(config)#interface ethernet 1/1
Console(config-if)#switchport dot1q-tunnel service 100 match cvid 10
```

```
Console(config-if)#switchport dot1q-tunnel service 200 match cvid 20
Console(config-if)#switchport dot1q-tunnel service 300 match cvid 30
```

6. Configures port 1 as member of VLANs 10, 20 and 30 to avoid filtering out incoming frames tagged with VID 10, 20 or 30 on port 1

```
Console(config)#interface ethernet 1/1
Console(config-if)#switchport allowed vlan add 10,20,30
```

7. Verify configuration settings.

```
Console#show dot1q-tunnel service
802.1Q Tunnel Service Subscriptions

 Port     Match C-VID S-VID
 -------- ----------- -----
 Eth 1/ 1          10   100
 Eth 1/ 1          20   200
 Eth 1/ 1          30   300
```

Step 2. Configure Switch C.

1. Create VLAN 100, 200 and 300.

```
Console(config)#vlan database
Console(config-vlan)#vlan 100,200,300 media ethernet state active
```

2. Configure port 1 and port 2 as tagged members of VLAN 100, 200 and 300.

```
Console(config)#interface ethernet 1/1,2
Console(config-if)#switchport allowed vlan add 100,200,300 tagged
```

switchport dot1q-tunnel tpid

This command sets the Tag Protocol Identifier (TPID) value of a tunnel port. Use the **no** form to restore the default setting.

Syntax

switchport dot1q-tunnel tpid *tpid*

no switchport dot1q-tunnel tpid

tpid – Sets the ethertype value for 802.1Q encapsulation. This identifier is used to select a nonstandard 2-byte ethertype to identify 802.1Q tagged frames. The standard ethertype value is 0x8100. (Range: 0800-FFFF hexadecimal)

Default Setting

0x8100

Command Mode

Interface Configuration (Ethernet, Port Channel)

Command Usage

- Use the **switchport dot1q-tunnel tpid** command to set a custom 802.1Q ethertype value on the selected interface. This feature allows the switch to interoperate with third-party switches that do not use the standard 0x8100 ethertype to identify 802.1Q-tagged frames. For example, 0x1234 is set as the

custom 802.1Q ethertype on a trunk port, incoming frames containing that ethertype are assigned to the VLAN contained in the tag following the ethertype field, as they would be with a standard 802.1Q trunk. Frames arriving on the port containing any other ethertype are looked upon as untagged frames, and assigned to the native VLAN of that port.

- The specified ethertype only applies to ports configured in Uplink mode using the switchport dot1q-tunnel mode command. If the port is in normal mode (i.e, unspecified), the TPID is always 8100. If the port is in Access mode, received packets are processes as untagged packets.

Example

```
Console(config)#interface ethernet 1/1
Console(config-if)#switchport dot1q-tunnel tpid 9100
Console(config-if)#
```

Related Commands

show interfaces switchport (365)

show dot1q-tunnel

This command displays information about QinQ tunnel ports.

Syntax

show dot1q-tunnel [**interface** *interface* [**service** *svid*] | **service** [*svid*]]

interface

ethernet *unit/port*

unit - Unit identifier. (Range: 1)

port - Port number. (Range: 1-52)

port-channel *channel-id* (Range: 1-8)

svid - VLAN ID for the outer VLAN tag (SPVID). (Range: 1-4094)

Command Mode

Privileged Exec

Example

```
Console(config)#dot1q-tunnel system-tunnel-control
Console(config)#interface ethernet 1/1
Console(config-if)#switchport dot1q-tunnel mode access
Console(config-if)#interface ethernet 1/2
Console(config-if)#switchport dot1q-tunnel mode uplink
Console(config-if)#end
Console#show dot1q-tunnel
802.1Q Tunnel Status : Enabled

Port     Mode   TPID (hex)
-------- ------ ----------
Eth 1/ 1 Access       8100
Eth 1/ 2 Uplink       8100
```

```
Eth 1/ 3 Normal       8100
:
Console#show dot1q-tunnel interface ethernet 1/5
802.1Q Tunnel Service Subscriptions

 Port     Match C-VID S-VID
 -------- ----------- -----
 Eth 1/ 5           1   100

Console#show dot1q-tunnel service 100
802.1Q Tunnel Service Subscriptions

 Port     Match C-VID S-VID
 -------- ----------- -----
 Eth 1/ 5           1   100
 Eth 1/ 6           1   100

Console#
```

Related Commands

switchport dot1q-tunnel mode (460)

Configuring Protocol-based VLANs

The network devices required to support multiple protocols cannot be easily grouped into a common VLAN. This may require non-standard devices to pass traffic between different VLANs in order to encompass all the devices participating in a specific protocol. This kind of configuration deprives users of the basic benefits of VLANs, including security and easy accessibility.

To avoid these problems, you can configure this switch with protocol-based VLANs that divide the physical network into logical VLAN groups for each required protocol. When a frame is received at a port, its VLAN membership can then be determined based on the protocol type in use by the inbound packets.

Table 94: Protocol-based VLAN Commands

Command	Function	Mode
protocol-vlan protocol-group	Create a protocol group, specifying the supported protocols	GC
protocol-vlan protocol-group	Maps a protocol group to a VLAN	IC
show protocol-vlan protocol-group	Shows the configuration of protocol groups	PE
show interfaces protocol-vlan protocol-group	Shows the interfaces mapped to a protocol group and the corresponding VLAN	PE

To configure protocol-based VLANs, follow these steps:

1. First configure VLAN groups for the protocols you want to use (page 450). Although not mandatory, we suggest configuring a separate VLAN for each

major protocol running on your network. Do not add port members at this time.

2. Create a protocol group for each of the protocols you want to assign to a VLAN using the protocol-vlan protocol-group command (Global Configuration mode).

3. Then map the protocol for each interface to the appropriate VLAN using the protocol-vlan protocol-group command (Interface Configuration mode).

protocol-vlan protocol-group (Configuring Groups)

This command creates a protocol group, or to add specific protocols to a group. Use the **no** form to remove a protocol group.

Syntax

protocol-vlan protocol-group *group-id* [{**add** | **remove**} **frame-type** *frame* **protocol-type** *protocol*]

no protocol-vlan protocol-group *group-id*

group-id - Group identifier of this protocol group. (Range: 1-2147483647)

frame[11] - Frame type used by this protocol. (Options: ethernet, rfc_1042, llc_other)

protocol - Protocol type. The only option for the llc_other frame type is ipx_raw. The options for all other frames types include: arp, ip, ipv6, rarp.

Default Setting

No protocol groups are configured.

Command Mode

Global Configuration

Example

The following creates protocol group 1, and specifies Ethernet frames with IP and ARP protocol types:

```
Console(config)#protocol-vlan protocol-group 1 add frame-type ethernet
  protocol-type ip
Console(config)#protocol-vlan protocol-group 1 add frame-type ethernet
  protocol-type arp
Console(config)#
```

11. SNAP frame types are not supported by this switch due to hardware limitations.

protocol-vlan protocol-group (Configuring Interfaces)

This command maps a protocol group to a VLAN for the current interface. Use the **no** form to remove the protocol mapping for this interface.

Syntax

protocol-vlan protocol-group *group-id* **vlan** *vlan-id* **priority** *priority*

no protocol-vlan protocol-group *group-id* **vlan**

group-id - Group identifier of this protocol group. (Range: 1-2147483647)

vlan-id - VLAN to which matching protocol traffic is forwarded. (Range: 1-4094)

priority - The priority assigned to untagged ingress traffic. (Range: 0-7, where 7 is the highest priority)

Default Setting

No protocol groups are mapped for any interface.
Priority: 0

Command Mode

Interface Configuration (Ethernet, Port Channel)

Command Usage

- When creating a protocol-based VLAN, only assign interfaces via this command. If you assign interfaces using any of the other VLAN commands (such as the vlan command), these interfaces will admit traffic of any protocol type into the associated VLAN.
- When MAC-based, IP subnet-based, and protocol-based VLANs are supported concurrently, priority is applied in this sequence, and then port-based VLANs last.
- When a frame enters a port that has been assigned to a protocol VLAN, it is processed in the following manner:
  - If the frame is tagged, it will be processed according to the standard rules applied to tagged frames.
  - If the frame is untagged and the protocol type matches, the frame is forwarded to the appropriate VLAN.
  - If the frame is untagged but the protocol type does not match, the frame is forwarded to the default VLAN for this interface.

Example

The following example maps the traffic entering Port 1 which matches the protocol type specified in protocol group 1 to VLAN 2.

```
Console(config)#interface ethernet 1/1
Console(config-if)#protocol-vlan protocol-group 1 vlan 2 priority 0
Console(config-if)#
```

show protocol-vlan protocol-group

This command shows the frame and protocol type associated with protocol groups.

Syntax

show protocol-vlan protocol-group [*group-id*]

group-id - Group identifier for a protocol group. (Range: 1-2147483647)

Default Setting

All protocol groups are displayed.

Command Mode

Privileged Exec

Example

This shows protocol group 1 configured for IP over Ethernet:

```
Console#show protocol-vlan protocol-group

 Protocol Group ID   Frame Type    Protocol Type
------------------ ------------- ---------------
                 1      ethernet     08 00
Console#
```

show interfaces protocol-vlan protocol-group

This command shows the mapping from protocol groups to VLANs for the selected interfaces.

Syntax

show interfaces protocol-vlan protocol-group [*interface*]

interface

ethernet *unit/port*

unit - Unit identifier. (Range: 1)

port - Port number. (Range: 1-52)

port-channel *channel-id* (Range: 1-8)

Default Setting

The mapping for all interfaces is displayed.

Command Mode
Privileged Exec

Example
This shows that traffic entering Port 1 that matches the specifications for protocol group 1 will be mapped to VLAN 2:

```
Console#show interfaces protocol-vlan protocol-group
Port     Protocol Group ID VLAN ID Priority
-------- ---------------- ------- --------
 Eth 1/1                 1   vlan2        0
Console#
```

Configuring MAC Based VLANs

When using IEEE 802.1Q port-based VLAN classification, all untagged frames received by a port are classified as belonging to the VLAN whose VID (PVID) is associated with that port.

When MAC-based VLAN classification is enabled, the source address of untagged ingress frames are checked against the MAC address-to-VLAN mapping table. If an entry is found for that address, these frames are assigned to the VLAN indicated in the entry. If no MAC address is matched, the untagged frames are classified as belonging to the receiving port's VLAN ID (PVID).

Table 95: MAC Based VLAN Commands

Command	Function	Mode
mac-vlan	Defines the IP Subnet VLANs	GC
show mac-vlan	Displays IP Subnet VLAN settings	PE

mac-vlan

This command configures MAC address-to-VLAN mapping. Use the **no** form to remove an assignment.

Syntax

mac-vlan mac-address *mac-address* [**mask** *mask-address*] **vlan** *vlan-id* [**priority** *priority*]

no mac-vlan mac-address {*mac-address* [**mask** *mask-address*] | **all**}

mac-address – The source MAC address to be matched. Configured MAC addresses can only be unicast addresses. The MAC address must be specified in the format xx-xx-xx-xx-xx-xx or xxxxxxxxxxxx.

mask-address - Identifies a range of MAC addresses. The mask can be specified in the format xx-xx-xx-xx-xx-xx or xxxxxxxxxxxx, where an equivalent binary value "1" means relevant and "0" means ignore.

vlan-id – VLAN to which the matching source MAC address traffic is forwarded. (Range: 1-4094)

priority – The priority assigned to untagged ingress traffic. (Range: 0-7, where 7 is the highest priority)

Default Setting
None

Command Mode
Global Configuration

Command Usage
- The MAC-to-VLAN mapping applies to all ports on the switch.
- Source MAC addresses can be mapped to only one VLAN ID.
- Configured MAC addresses cannot be broadcast or multicast addresses.
- When MAC-based, IP subnet-based, and protocol-based VLANs are supported concurrently, priority is applied in this sequence, and then port-based VLANs last.
- The binary equivalent mask matching the characters in the front of the first non-zero character must all be 1s (e.g., 111, i.e., it cannot be 101 or 001...). A mask for the MAC address: 00-50-6e-00-5f-b1 translated into binary:

  MAC: 00000000-01010000-01101110-00000000-01011111-10110001

  could be: 11111111-11xxxxxx-xxxxxxxx-xxxxxxxx-xxxxxxxx-xxxxxxxx

  So the mask in hexadecimal for this example could be:

  ff-fx-xx-xx-xx-xx/ff-c0-00-00-00-00/ff-e0-00-00-00-00

Example
The following example assigns traffic from source MAC address 00-00-00-11-22-33 to VLAN 10.

```
Console(config)#mac-vlan mac-address 00-00-00-11-22-33 mask FF-FF-FF-FF-00-00
  vlan 10
Console(config)#
```

show mac-vlan

This command displays MAC address-to-VLAN assignments.

Command Mode
Privileged Exec

Command Usage
Use this command to display MAC address-to-VLAN mappings.

Example

The following example displays all configured MAC address-based VLANs.

```
Console#show mac-vlan
MAC Address        VLAN ID   Priority
-----------------  --------  --------
00-00-00-11-22-33        10         0
Console#
```

Configuring Voice VLANs

The switch allows you to specify a Voice VLAN for the network and set a CoS priority for the VoIP traffic. VoIP traffic can be detected on switch ports by using the source MAC address of packets, or by using LLDP (IEEE 802.1AB) to discover connected VoIP devices. When VoIP traffic is detected on a configured port, the switch automatically assigns the port to the Voice VLAN. Alternatively, switch ports can be manually configured.

Table 96: Voice VLAN Commands

Command	Function	Mode
voice vlan	Defines the Voice VLAN ID	GC
voice vlan aging	Configures the aging time for Voice VLAN ports	GC
voice vlan mac-address	Configures VoIP device MAC addresses	GC
switchport voice vlan	Sets the Voice VLAN port mode	IC
switchport voice vlan priority	Sets the VoIP traffic priority for ports	IC
switchport voice vlan rule	Sets the automatic VoIP traffic detection method for ports	IC
switchport voice vlan security	Enables Voice VLAN security on ports	IC
show voice vlan	Displays Voice VLAN settings	PE

voice vlan

This command enables VoIP traffic detection and defines the Voice VLAN ID. Use the **no** form to disable the Voice VLAN.

Syntax

voice vlan *voice-vlan-id*

no voice vlan

voice-vlan-id - Specifies the voice VLAN ID. (Range: 1-4094)

Default Setting

Disabled

Command Mode
Global Configuration

Command Usage
- When IP telephony is deployed in an enterprise network, it is recommended to isolate the Voice over IP (VoIP) network traffic from other data traffic. Traffic isolation helps prevent excessive packet delays, packet loss, and jitter, which results in higher voice quality. This is best achieved by assigning all VoIP traffic to a single VLAN.
- VoIP traffic can be detected on switch ports by using the source MAC address of packets, or by using LLDP (IEEE 802.1AB) to discover connected VoIP devices. When VoIP traffic is detected on a configured port, the switch automatically assigns the port as a tagged member of the Voice VLAN.
- Only one Voice VLAN is supported and it must already be created on the switch before it can be specified as the Voice VLAN.
- The Voice VLAN ID cannot be modified when the global auto-detection status is enabled (see the switchport voice vlan command.

Example
The following example enables VoIP traffic detection and specifies the Voice VLAN ID as 1234.

```
Console(config)#voice vlan 1234
Console(config)#
```

voice vlan aging

This command sets the Voice VLAN ID time out. Use the **no** form to restore the default.

Syntax

voice vlan aging *minutes*

no voice vlan

minutes - Specifies the port Voice VLAN membership time out. (Range: 5-43200 minutes)

Default Setting
1440 minutes

Command Mode
Global Configuration

Command Usage
The Voice VLAN aging time is the time after which a port is removed from the Voice VLAN when VoIP traffic is no longer received on the port.

The VoIP aging time starts to count down when the OUI's MAC address expires from the MAC address table. Therefore, the MAC address aging time should be added to the overall aging time. For example, if you configure the MAC address table aging time to 30 seconds, and voice VLAN aging time to 5 minutes, then after 5.5 minutes, a port will be removed from the voice VLAN when VoIP traffic is no longer received on the port. Alternatively, if you clear the MAC address table manually, then the switch will also start counting down the voice VLAN aging time.

Note that when the switchport voice vlan command is set to auto mode, the remaining aging time displayed by the show voice vlan command will be displayed. Otherwise, if the switchport voice vlan command is disabled or set to manual mode, the remaining aging time will display "NA."

Example

The following example configures the Voice VLAN aging time as 3000 minutes.

```
Console(config)#voice vlan aging 3000
Console(config)#
```

voice vlan mac-address

This command specifies MAC address ranges to add to the OUI Telephony list. Use the **no** form to remove an entry from the list.

Syntax

voice vlan mac-address *mac-address* **mask** *mask-address* [**description** *description*]

no voice vlan mac-address *mac-address* **mask** *mask-address*

mac-address - Defines a MAC address OUI that identifies VoIP devices in the network. (Format: xx-xx-xx-xx-xx-xx or xxxxxxxxxxxx; for example, 01-23-45-00-00-00)

mask-address - Identifies a range of MAC addresses. (Range: 80-00-00-00-00-00 to FF-FF-FF-FF-FF-FF)

description - User-defined text that identifies the VoIP devices. (Range: 1-32 characters)

Default Setting

None

Command Mode

Global Configuration

Command Usage

- VoIP devices attached to the switch can be identified by the manufacturer's Organizational Unique Identifier (OUI) in the source MAC address of received packets. OUI numbers are assigned to manufacturers and form the first three octets of device MAC addresses. The MAC OUI numbers for VoIP equipment can

be configured on the switch so that traffic from these devices is recognized as VoIP.

- Setting a mask of FF-FF-FF-00-00-00 identifies all devices with the same OUI (the first three octets). Other masks restrict the MAC address range. Setting a mask of FF-FF-FF-FF-FF-FF specifies a single MAC address.

Example

The following example adds a MAC OUI to the OUI Telephony list.

```
Console(config)#voice vlan mac-address 00-12-34-56-78-90 mask ff-ff-ff-00-00-
  00 description A new phone
Console(config)#
```

switchport voice vlan

This command specifies the Voice VLAN mode for ports. Use the **no** form to disable the Voice VLAN feature on the port.

Syntax

switchport voice vlan {**manual** | **auto**}

no switchport voice vlan

manual - The Voice VLAN feature is enabled on the port, but the port must be manually added to the Voice VLAN.

auto - The port will be added as a tagged member to the Voice VLAN when VoIP traffic is detected on the port.

Default Setting

Disabled

Command Mode

Interface Configuration

Command Usage

- When auto is selected, you must select the method to use for detecting VoIP traffic, either OUI or 802.1AB (LLDP) using the switchport voice vlan rule command. When OUI is selected, be sure to configure the MAC address ranges in the Telephony OUI list using the voice vlan mac-address command.

- All ports are set to VLAN hybrid mode by default. Prior to enabling VoIP for a port (by setting the VoIP mode to Auto or Manual as described below), ensure that VLAN membership is not set to access mode using the switchport mode command.

Example

The following example sets port 1 to Voice VLAN auto mode.

```
Console(config)#interface ethernet 1/1
Console(config-if)#switchport voice vlan auto
Console(config-if)#
```

switchport voice vlan priority

This command specifies a CoS priority for VoIP traffic on a port. Use the **no** form to restore the default priority on a port.

Syntax

switchport voice vlan priority *priority-value*

no switchport voice vlan priority

priority-value - The CoS priority value. (Range: 0-6)

Default Setting

6

Command Mode

Interface Configuration

Command Usage

Specifies a CoS priority to apply to the port VoIP traffic on the Voice VLAN. The priority of any received VoIP packet is overwritten with the new priority when the Voice VLAN feature is active for the port.

Example

The following example sets the CoS priority to 5 on port 1.

```
Console(config)#interface ethernet 1/1
Console(config-if)#switchport voice vlan priority 5
Console(config-if)#
```

switchport voice vlan rule

This command selects a method for detecting VoIP traffic on a port. Use the **no** form to disable the detection method on the port.

Syntax

[**no**] **switchport voice vlan rule** {**oui** | **lldp**}

oui - Traffic from VoIP devices is detected by the Organizationally Unique Identifier (OUI) of the source MAC address.

lldp - Uses LLDP to discover VoIP devices attached to the port.

Default Setting
OUI: Enabled
LLDP: Disabled

Command Mode
Interface Configuration

Command Usage
- When OUI is selected, be sure to configure the MAC address ranges in the Telephony OUI list (see the voice vlan mac-address command. MAC address OUI numbers must be configured in the Telephony OUI list so that the switch recognizes the traffic as being from a VoIP device.

- LLDP checks that the "telephone bit" in the system capability TLV is turned on. See "LLDP Commands" on page 595 for more information on LLDP.

Example
The following example enables the OUI method on port 1 for detecting VoIP traffic.

```
Console(config)#interface ethernet 1/1
Console(config-if)#switchport voice vlan rule oui
Console(config-if)#
```

switchport voice vlan security

This command enables security filtering for VoIP traffic on a port. Use the **no** form to disable filtering on a port.

Syntax

[**no**] **switchport voice vlan security**

Default Setting
Disabled

Command Mode
Interface Configuration

Command Usage
- Security filtering discards any non-VoIP packets received on the port that are tagged with the voice VLAN ID. VoIP traffic is identified by source MAC addresses configured in the Telephony OUI list, or through LLDP that discovers VoIP devices attached to the switch. Packets received from non-VoIP sources are dropped.

- When enabled, be sure the MAC address ranges for VoIP devices are configured in the Telephony OUI list (voice vlan mac-address).

Example

The following example enables security filtering on port 1.

```
Console(config)#interface ethernet 1/1
Console(config-if)#switchport voice vlan security
Console(config-if)#
```

show voice vlan

This command displays the Voice VLAN settings on the switch and the OUI Telephony list.

Syntax

show voice vlan {**oui** | **status**}

oui - Displays the OUI Telephony list.

status - Displays the global and port Voice VLAN settings.

Default Setting

None

Command Mode

Privileged Exec

Command Usage

When the switchport voice vlan command is set to auto mode, the remaining aging time displayed by the **show voice vlan** command will be displayed (or "Not Start" will be displayed). Otherwise, if the switchport voice vlan command is disabled or set to manual mode, the remaining aging time will display "NA."

Example

```
Console#show voice vlan status
Global Voice VLAN Status
Voice VLAN Status     : Enabled
Voice VLAN ID         : 1234
Voice VLAN aging time : 1440 minutes

Voice VLAN Port Summary
Port     Mode     Security Rule      Priority Remaining Age
                                               (minutes)
-------- -------- -------- --------- -------- -------------
Eth 1/ 1 Auto     Enabled  OUI              6 100
Eth 1/ 2 Disabled Disabled OUI              6 NA
Eth 1/ 3 Manual   Enabled  OUI              5 100
Eth 1/ 4 Auto     Disabled OUI              6 Not Start
Eth 1/ 5 Disabled Disabled OUI              6 NA
Eth 1/ 6 Disabled Disabled OUI              6 NA
Eth 1/ 7 Disabled Disabled OUI              6 NA
Eth 1/ 8 Disabled Disabled OUI              6 NA
Eth 1/ 9 Disabled Disabled OUI              6 NA
Eth 1/10 Disabled Disabled OUI              6 NA
```

```
Console#show voice vlan oui
OUI Address       Mask              Description
----------------- ----------------- ------------------------------
00-12-34-56-78-9A FF-FF-FF-00-00-00 old phones
00-11-22-33-44-55 FF-FF-FF-00-00-00 new phones
00-98-76-54-32-10 FF-FF-FF-FF-FF-FF Chris' phone

Console#
```

19 ERPS Commands

The G.8032 recommendation, also referred to as Ethernet Ring Protection Switching (ERPS), can be used to increase the availability and robustness of Ethernet rings.

This chapter describes commands used to configure ERPS.

Table 97: ERPS Commands

Command	Function	Mode
erps	Enables ERPS globally on the switch	GC
erps domain	Creates an ERPS ring and enters ERPS configuration mode	GC
control-vlan	Adds a Control VLAN to an ERPS ring	ERPS
enable	Activates the current ERPS ring	ERPS
guard-timer	Sets the timer to prevent ring nodes from receiving outdated R-APS messages	ERPS
holdoff-timer	Sets the timer to filter out intermittent link faults	ERPS
major-domain	Specifies the ERPS ring used for sending control packets	ERPS
meg-level	Sets the Maintenance Entity Group level for a ring	ERPS
mep-monitor	Specifies the CCM MEPs used to monitor the link on a ring node	ERPS
node-id	Sets the MAC address for a ring node	ERPS
non-erps-dev-protect	Sends non-standard health-check packets when in protection state	ERPS
non-revertive	Enables non-revertive mode, which requires the protection state on the RPL to manually cleared	ERPS
propagate-tc	Enables propagation of topology change messages from a secondary ring to the primary ring	ERPS
raps-def-mac	Sets the switch's MAC address to be used as the node identifier in R-APS messages	ERPS
raps-without-vc	Terminates the R-APS channel at the primary ring to sub-ring interconnection nodes	ERPS
ring-port	Configures a node's connection to the ring through the east or west interface	ERPS
rpl neighbor	Configures a ring node to be the RPL neighbor	ERPS
rpl owner	Configures a ring node to be the RPL owner	ERPS
version	Specifies compatibility with ERPS version 1 or 2	ERPS
wtr-timer	Sets timer to verify that the ring has stabilized before blocking the RPL after recovery from a signal failure	ERPS

Table 97: ERPS Commands (Continued)

Command	Function	Mode
clear erps statistics	Clears statistics, including SF, NR, NR-RB, FS, MS, Event, and Health protocol messages	PE
erps clear	Manually clears protection state which has been invoked by a Forced Switch or Manual Switch command, and the node is operating under non-revertive mode; or before the WTR or WTB timer expires when the node is operating in revertive mode	PE
erps forced-switch	Blocks the specified ring port	PE
erps manual-switch	Blocks the specified ring port, in the absence of a failure or an erps forced-switch command	PE
show erps	Displays status information for all configured rings, or for a specified ring	PE

Configuration Guidelines for ERPS

1. Create an ERPS ring: Create a ring using the erps domain command. The ring name is used as an index in the G.8032 database.

2. Configure the east and west interfaces: Each node on the ring connects to it through two ring ports. Use the ring-port command to configure one port connected to the next node in the ring to the east (or clockwise direction); and then use the ring-port command again to configure another port facing west in the ring.

3. Configure the RPL owner: Configure one node in the ring as the Ring Protection Link (RPL) owner using the rpl owner command. When this switch is configured as the RPL owner, the west ring port is set as being connected to the RPL. Under normal operations (Idle state), the RPL is blocked to ensure that a loop cannot form in the ring. If a signal failure brings down any other link in the ring, the RPL will be unblocked (Protection state) to ensure proper connectivity among all ring nodes until the failure is recovered.

4. Configure ERPS timers: Use the guard-timer command to set the timer is used to prevent ring nodes from receiving outdated R-APS messages, the holdoff-timer command to filter out intermittent link faults, and the wtr-timer command to verify that the ring has stabilized before blocking the RPL after recovery from a signal failure.

5. Configure the ERPS Control VLAN (CVLAN): Use the control-vlan command to create the VLAN used to pass R-APS ring maintenance commands. The CVLAN must NOT be configured with an IP address. In addition, only ring ports may be added to the CVLAN (prior to configuring the VLAN as a CVLAN). No other ports can be members of this VLAN (once set as a CVLAN). Also, the ring ports of the CVLAN must be tagged. Failure to observe these restrictions can result in a loop in the network.

6. Enable ERPS: Before enabling a ring as described in the next step, first use the erps command to globally enable ERPS on the switch. If ERPS has not yet been

enabled or has been disabled with the no erps command, no ERPS rings will work.

7. Enable an ERPS ring: Before an ERPS ring can work, it must be enabled using the enable command. When configuration is completed and the ring enabled, R-APS messages will start flowing in the control VLAN, and normal traffic will begin to flow in the data VLANs. To stop a ring, it can be disabled on any node using the no enable command.

8. Display ERPS status information: Use the show erps command to display general ERPS status information or detailed ERPS status information for a specific ring.

erps

This command enables ERPS on the switch. Use the **no** form to disable this feature.

Syntax

[**no**] **erps**

Default Setting

Disabled

Command Mode

Global Configuration

Command Usage

ERPS must be enabled globally on the switch before it can enabled on an ERPS ring using the enable command.

Example

```
Console(config)#erps
Console(config)#
```

Related Commands

enable (483)

erps domain

This command creates an ERPS ring and enters ERPS configuration mode for the specified domain. Use the **no** form to delete a ring.

Syntax

erps domain *ring-name* [**id** *ring-id*]

no erps domain *ring-name*

ring-name - Name of a specific ERPS ring. (Range: 1-12 characters)

ring-id - ERPS ring identifier used in R-APS messages. (Range: 1-255)

Default Setting
None

Command Mode
Global Configuration

Command Usage
- Service Instances within each ring are based on a unique maintenance association for the specific users, distinguished by the ring name, maintenance level, maintenance association's name, and assigned VLAN. Up to 6 ERPS rings can be configured on the switch.

- R-APS information is carried in an R-APS PDUs. The last octet of the MAC address is designated as the Ring ID (01-19-A7-00-00-[Ring ID]). If use of the default MAC address is disabled with the no raps-def-mac command, then the Ring ID configured by the **erps domain** command will be used in R-APS PDUs.

Example

```
Console(config)#erps domain r&d id 1
Console(config-erps)#
```

control-vlan

This command specifies a dedicated VLAN used for sending and receiving ERPS protocol messages. Use the **no** form to remove the Control VLAN.

Syntax

[**no**] **control-vlan** *vlan-id*

vlan-id - VLAN ID (Range: 1-4094)

Default Setting
None

Command Mode
ERPS Configuration

Command Usage
- Configure one control VLAN for each ERPS ring. First create the VLAN to be used as the control VLAN (vlan, page 450), add the ring ports for the east and west interface as tagged members to this VLAN (switchport allowed vlan, page 453), and then use the control-vlan command to add it to the ring.

- The following restrictions are recommended to avoid creating a loop in the network or other problems which may occur under some situations:
  - The Control VLAN must not be configured as a Layer 3 interface (with an IP address), nor as a private VLAN.

- In addition, only ring ports may be added to the Control VLAN. No other ports can be members of this VLAN.
- Also, the ring ports of the Control VLAN must be tagged.

◆ Once the ring has been activated with the enable command, the configuration of the control VLAN cannot be modified. Use the no enable command to stop the ERPS ring before making any configuration changes to the control VLAN.

Example

```
Console(config)#vlan database
Console(config-vlan)#vlan 2 name rdc media ethernet state active
Console(config-vlan)#exit
Console(config)#interface ethernet 1/12
Console(config-if)#switchport allowed vlan add 2 tagged
Console(config-if)#interface ethernet 1/11
Console(config-if)#switchport allowed vlan add 2 tagged
Console(config-if)#exit
Console(config)#erps domain rd1
Console(config-erps)#control-vlan 2
Console(config-erps)#
```

enable

This command activates the current ERPS ring. Use the **no** form to disable the current ring.

Syntax

[**no**] **enable**

Default Setting

Disabled

Command Mode

ERPS Configuration

Command Usage

◆ Before enabling a ring, the global ERPS function should be enabled with the erps command, the east and west ring ports configured on each node with the ring-port command, the RPL owner specified with the rpl owner command, and the control VLAN configured with the control-vlan command.

◆ Once enabled, the RPL owner node and non-owner node state machines will start, and the ring will enter idle state if no signal failures are detected.

Example

```
Console(config-erps)#enable
Console(config-erps)#
```

Related Commands
erps (481)

guard-timer

This command sets the guard timer to prevent ring nodes from receiving outdated R-APS messages. Use the **no** form to restore the default setting.

Syntax

guard-timer *milliseconds*

milliseconds - The guard timer is used to prevent ring nodes from receiving outdated R-APS messages. During the duration of the guard timer, all received R-APS messages are ignored by the ring protection control process, giving time for old messages still circulating on the ring to expire. (Range: 10-2000 milliseconds, in steps of 10 milliseconds)

Default Setting
500 milliseconds

Command Mode
ERPS Configuration

Command Usage
The guard timer duration should be greater than the maximum expected forwarding delay for an R-APS message to pass around the ring. A side-effect of the guard timer is that during its duration, a node will be unaware of new or existing ring requests transmitted from other nodes.

Example

```
Console(config-erps)#guard-timer 300
Console(config-erps)#
```

holdoff-timer

This command sets the timer to filter out intermittent link faults. Use the **no** form to restore the default setting.

Syntax

holdoff-timer *milliseconds*

milliseconds - The hold-off timer is used to filter out intermittent link faults. Faults will only be reported to the ring protection mechanism if this timer expires. (Range: 0-10000 milliseconds, in steps of 100 milliseconds)

Default Setting
0 milliseconds

Command Mode
ERPS Configuration

Command Usage

In order to coordinate timing of protection switches at multiple layers, a hold-off timer may be required. Its purpose is to allow, for example, a server layer protection switch to have a chance to fix the problem before switching at a client layer.

When a new defect or more severe defect occurs (new Signal Failure), this event will not be reported immediately to the protection switching mechanism if the provisioned hold-off timer value is non-zero. Instead, the hold-off timer will be started. When the timer expires, whether a defect still exists or not, the timer will be checked. If one does exist, that defect will be reported to the protection switching mechanism. The reported defect need not be the same one that started the timer.

Example

```
Console(config-erps)#holdoff-timer 300
Console(config-erps)#
```

major-domain

This command specifies the ERPS ring used for sending control packets. Use the **no** form to remove the current setting.

Syntax

major-domain *name*

no major-domain

name - Name of the ERPS ring used for sending control packets. (Range: 1-32 characters)

Default Setting

None

Command Mode

ERPS Configuration

Command Usage

- This switch can support up to six rings. However, ERPS control packets can only be sent on one ring. This command is used to indicate that the current ring is a secondary ring, and to specify the major ring which will be used to send ERPS control packets.

- The Ring Protection Link (RPL) is the west port and can not be configured. So the physical port on a secondary ring must be the west port. In other words, if a domain has two physical ring ports, this ring can only be a major ring, not a secondary ring (or sub-domain) which can have only one physical ring port. This command will therefore fail if the east port is already configured (see the ring-port command).

Example

```
Console(config-erps)#major-domain rd0
Console(config-erps)#
```

meg-level

This command sets the Maintenance Entity Group level for a ring. Use the **no** form to restore the default setting.

Syntax

meg-level *level*

level - The maintenance entity group (MEG) level which provides a communication channel for ring automatic protection switching (R-APS) information. (Range: 0-7)

Default Setting

1

Command Mode

ERPS Configuration

Command Usage

- This parameter is used to ensure that received R-APS PDUs are directed for this ring. A unique level should be configured for each local ring if there are many R-APS PDUs passing through this switch.

- If CFM continuity check messages are used to monitor the link status of an ERPS ring node as specified by the mep-monitor command, then the MEG level set by the **meg-level** command must match the authorized maintenance level of the CFM domain to which the specified MEP belongs. The MEP's primary VLAN must also be the same as that used for the ERPS ring's control VLAN.

Example

```
Console(config-erps)#meg-level 0
Console(config-erps)#
```

Related Commands

ethernet cfm domain (697)
ethernet cfm mep (702)

mep-monitor

This command specifies the CFM MEPs used to monitor the link on a ring node. Use the **no** form to restore the default setting.

Syntax

mep-monitor {**east** | **west**} **mep** *mpid*

east - Connects to next ring node to the east.

west - Connects to next ring node to the west.

mpid – Maintenance end point identifier. (Range: 1-8191)

Default Setting

None

Command Mode

ERPS Configuration

Command Usage

- If this command is used to monitor the link status of an ERPS node with CFM continuity check messages, then the MEG level set by the meg-level command must match the authorized maintenance level of the CFM domain to which the specified MEP belongs.
- To ensure complete monitoring of a ring node, use the **mep-monitor** command to specify the CFM MEPs used to monitor both the east and west ports of the ring node.
- If CFM determines that a MEP node which has been configured to monitor a ring port with this command has gone down, this information is passed to ERPS, which in turn processes it as a ring node failure. For more information on how ERPS recovers from a node failure, refer to "Ethernet Ring Protection Switching" in the *Web Management Guide*.

Example

```
Console(config-erps)#mep-monitor east mep 1
Console(config-erps)#
```

Related Commands

ethernet cfm domain (697)
ethernet cfm mep (702)

node-id

This command sets the MAC address for a ring node. Use the **no** form to restore the default setting.

Syntax

node-id *mac-address*

mac-address – A MAC address unique to the ring node. The MAC address must be specified in the format xx-xx-xx-xx-xx-xx or xxxxxxxxxxxx.

Default Setting

CPU MAC address

Command Mode

ERPS Configuration

Command Usage

- The ring node identifier is used to identify a node in R-APS messages for both automatic and manual switching recovery operations.

  For example, a node that has one ring port in SF condition and detects that the condition has been cleared, will continuously transmit R-APS (NR) messages with its own Node ID as priority information over both ring ports, informing its neighbors that no request is present at this node. When another recovered node holding the link blocked receives this message, it compares the Node ID information with its own. If the received R-APS (NR) message has a higher priority, this unblocks its ring ports. Otherwise, the block remains unchanged.

- The node identifier may also be used for debugging, such as to distinguish messages when a node is connected to more than one ring.

Example

```
Console(config-erps)#node-id 00-12-CF-61-24-2D
Console(config-erps)#
```

non-erps-dev-protect

This command sends non-standard health-check packets when an owner node enters protection state without any link down event having been detected through SF messages. Use the **no** form to disable this feature.

Syntax

[**no**] **non-erps-dev-protect**

Default Setting

Disabled

Command Mode

ERPS Configuration

Command Usage

- The RPL owner node detects a failed link when it receives R-APS (SF - signal fault) messages from nodes adjacent to the failed link. The owner then enters protection state by unblocking the RPL. However, using this standard recovery procedure may cause a non-EPRS device to become isolated when the ERPS device adjacent to it detects a continuity check message (CCM) loss event and blocks the link between the non-ERPS device and ERPS device.

  CCMs are propagated by the Connectivity Fault Management (CFM) protocol as described under "CFM Commands" on page 691. If the standard recovery procedure were used as shown in the following figure, and node E detected CCM loss, it would send an R-APS (SF) message to the RPL owner and block the link to node D, isolating that non-ERPS device.

  Figure 2: Non-ERPS Device Protection

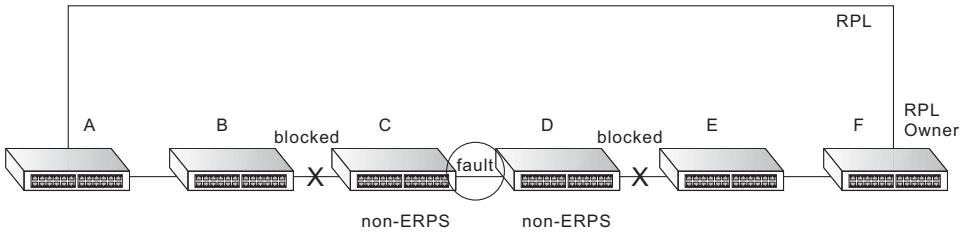

  When non-ERPS device protection is enabled on the ring, the ring ports on the RPL owner node and non-owner nodes will not be blocked when signal loss is detected by CCM loss events.

- When non-ERPS device protection is enabled on an RPL owner node, it will send non-standard health-check packets to poll the ring health when it enters the protection state. It does not use the normal procedure of waiting to receive an R-APS (NR - no request) message from nodes adjacent to the recovered link. Instead, it waits to see if the non-standard health-check packets loop back. If they do, indicating that the fault has been resolved, the RPL will be blocked.

  After blocking the RPL, the owner node will still transmit an R-APS (NR, RB - ring blocked) message. ERPS-compliant nodes receiving this message flush their forwarding database and unblock previously blocked ports. The ring is now returned to Idle state.

Example

```
Console(config-erps)#non-erps-dev-protect
Console(config-erps)#
```

non-revertive

This command enables non-revertive mode, which requires the protection state on the RPL to manually cleared. Use the **no** form to restore the default revertive mode.

Syntax

[**no**] **non-revertive**

Default Setting

Disabled

Command Mode

ERPS Configuration

Command Usage

- Revertive behavior allows the switch to automatically return the RPL from Protection state to Idle state through the exchange of protocol messages.

  Non-revertive behavior for Protection, Forced Switch, and Manual Switch states are basically the same. Non-revertive behavior requires the erps clear command to used to return the RPL from Protection state to Idle state.

- Recovery for Protection Switching – A ring node that has one or more ring ports in an SF (Signal Fail) condition, upon detecting the SF condition cleared, keeps at least one of its ring ports blocked for the traffic channel and for the R-APS channel, until the RPL is blocked as a result of ring protection reversion, or until there is another higher priority request (e.g., an SF condition) in the ring.

  A ring node that has one ring port in an SF condition and detects the SF condition cleared, continuously transmits the R-APS (NR – no request) message with its own Node ID as the priority information over both ring ports, informing that no request is present at this ring node and initiates a guard timer. When another recovered ring node (or nodes) holding the link block receives this message, it compares the Node ID information with its own Node ID. If the received R-APS (NR) message has the higher priority, this ring node unblocks its ring ports. Otherwise, the block remains unchanged. As a result, there is only one link with one end blocked.

  The ring nodes stop transmitting R-APS (NR) messages when they accept an R-APS (NR, RB – RPL Blocked), or when another higher priority request is received.

  - Recovery with Revertive Mode – When all ring links and ring nodes have recovered and no external requests are active, reversion is handled in the following way:

    a. The reception of an R-APS (NR) message causes the RPL Owner Node to start the WTR (Wait-to-Restore) timer.

    b. The WTR timer is cancelled if during the WTR period a higher priority request than NR is accepted by the RPL Owner Node or is declared locally at the RPL Owner Node.

    c. When the WTR timer expires, without the presence of any other higher priority request, the RPL Owner Node initiates reversion by blocking its

traffic channel over the RPL, transmitting an R-APS (NR, RB) message over both ring ports, informing the ring that the RPL is blocked, and performing a flush FDB action.

d. The acceptance of the R-APS (NR, RB) message causes all ring nodes to unblock any blocked non-RPL link that does not have an SF condition. If it is an R-APS (NR, RB) message without a DNF (do not flush) indication, all ring nodes flush the FDB.

- Recovery with Non-revertive Mode – In non-revertive operation, the ring does not automatically revert when all ring links and ring nodes have recovered and no external requests are active. Non-revertive operation is handled in the following way:

  a. The RPL Owner Node does not generate a response on reception of an R-APS (NR) messages.

  b. When other healthy ring nodes receive the NR (Node ID) message, no action is taken in response to the message.

  c. When the operator issues the erps clear command for non-revertive mode at the RPL Owner Node, the non-revertive operation is cleared, the RPL Owner Node blocks its RPL port, and transmits an R-APS (NR, RB) message in both directions, repeatedly.

  d. Upon receiving an R-APS (NR, RB) message, any blocking node should unblock its non-failed ring port. If it is an R-APS (NR, RB) message without a DNF indication, all ring nodes flush the FDB.

◆ Recovery for Forced Switching – An erps forced-switch command is removed by issuing the erps clear command to the same ring node where Forced Switch mode is in effect. The clear command removes any existing local operator commands, and triggers reversion if the ring is in revertive behavior mode.

The ring node where the Forced Switch was cleared keeps the ring port blocked for the traffic channel and for the R-APS channel, due to the previous Forced Switch command. This ring port is kept blocked until the RPL is blocked as a result of ring protection reversion, or until there is another higher priority request (e.g., an SF condition) in the ring.

The ring node where the Forced Switch was cleared continuously transmits the R-APS (NR) message on both ring ports, informing other nodes that no request is present at this ring node. The ring nodes stop transmitting R-APS (NR) messages when they accept an RAPS (NR, RB) message, or when another higher priority request is received.

If the ring node where the Forced Switch was cleared receives an R-APS (NR) message with a Node ID higher than its own Node ID, it unblocks any ring port which does not have an SF condition and stops transmitting R-APS (NR) message over both ring ports.

- Recovery with revertive mode is handled in the following way:

  a. The reception of an R-APS (NR) message causes the RPL Owner Node to start the WTB timer.

b. The WTB timer is cancelled if during the WTB period a higher priority request than NR is accepted by the RPL Owner Node or is declared locally at the RPL Owner Node.

c. When the WTB timer expires, in the absence of any other higher priority request, the RPL Owner Node initiates reversion by blocking the traffic channel over the RPL, transmitting an R-APS (NR, RB) message over both ring ports, informing the ring that the RPL is blocked, and flushes the FDB.

d. The acceptance of the R-APS (NR, RB) message causes all ring nodes to unblock any blocked non-RPL that does not have an SF condition. If it is an R-APS (NR, RB) message without a DNF indication, all ring nodes flush their FDB. This action unblocks the ring port which was blocked as a result of an operator command.

- Recovery with non-revertive mode is handled in the following way:

  a. The RPL Owner Node, upon reception of an R-APS(NR) message and in the absence of any other higher priority request does not perform any action.

  b. Then, after the operator issues the erps clear command at the RPL Owner Node, this ring node blocks the ring port attached to the RPL, transmits an R-APS (NR, RB) message on both ring ports, informing the ring that the RPL is blocked, and flushes its FDB.

  c. The acceptance of the R-APS (NR, RB) message triggers all ring nodes to unblock any blocked non-RPL which does not have an SF condition. If it is an R-APS (NR, RB) message without a DNF indication, all ring nodes flush their FDB. This action unblocks the ring port which was blocked as result of an operator command.

◆ Recovery for Manual Switching – An erps manual-switch command is removed by issuing the erps clear command at the same ring node where the Manual Switch is in effect. The clear command removes any existing local operator commands, and triggers reversion if the ring is in revertive behavior mode.

The ring node where the Manual Switch was cleared keeps the ring port blocked for the traffic channel and for the R-APS channel, due to the previous Manual Switch command. This ring port is kept blocked until the RPL is blocked as a result of ring protection reversion, or until there is another higher priority request (e.g., an SF condition) in the ring.

The Ethernet Ring Node where the Manual Switch was cleared continuously transmits the R-APS (NR) message on both ring ports, informing that no request is present at this ring node. The ring nodes stop transmitting R-APS (NR) messages when they accept an RAPS (NR, RB) message, or when another higher priority request is received.

If the ring node where the Manual Switch was cleared receives an R-APS (NR) message with a Node ID higher than its own Node ID, it unblocks any ring port which does not have an SF condition and stops transmitting R-APS (NR) message on both ring ports.

- Recovery with revertive mode is handled in the following way:
  - **a.** The RPL Owner Node, upon reception of an R-APS (NR) message and in the absence of any other higher priority request, starts the WTB timer and waits for it to expire. While the WTB timer is running, any latent R-APS (MS) message is ignored due to the higher priority of the WTB running signal.
  - **b.** When the WTB timer expires, it generates the WTB expire signal. The RPL Owner Node, upon reception of this signal, initiates reversion by blocking the traffic channel on the RPL, transmitting an R-APS (NR, RB) message over both ring ports, informing the ring that the RPL is blocked, and flushes its FDB.
  - **c.** The acceptance of the R-APS (NR, RB) message causes all ring nodes to unblock any blocked non-RPL that does not have an SF condition. If it is an R-APS (NR, RB) message without a DNF indication, all Ethernet Ring Nodes flush their FDB. This action unblocks the ring port which was blocked as a result of an operator command.

- Recovery with non-revertive mode is handled in the following way:
  - **a.** The RPL Owner Node, upon reception of an R-APS (NR) message and in the absence of any other higher priority request does not perform any action.
  - **b.** Then, after the operator issues the erps clear command at the RPL Owner Node, this ring node blocks the ring port attached to the RPL, transmits an R-APS (NR, RB) message over both ring ports, informing the ring that the RPL is blocked, and flushes its FDB.
  - **c.** The acceptance of the R-APS (NR, RB) message triggers all ring nodes to unblock any blocked non-RPL which does not have an SF condition. If it is an R-APS (NR, RB) message without a DNF indication, all ring nodes flush their FDB. This action unblocks the ring port which was blocked as result of an operator command.

Example

```
Console(config-erps)#non-revertive
Console(config-erps)#
```

propagate-tc

This command enables propagation of topology change messages for a secondary ring to the primary ring. Use the **no** form to disable this feature.

Syntax

[**no**] **propagate-tc**

Default Setting

Disabled

Command Mode
ERPS Configuration

Command Usage
- When a secondary ring detects a topology change, it can pass a message about this event to the major ring. When the major ring receives this kind of message from a secondary ring, it can clear the MAC addresses on its ring ports to help the secondary ring restore its connections more quickly through protection switching.

- When the MAC addresses are cleared, data traffic may flood onto the major ring. The data traffic will become stable after the MAC addresses are learned again. The major ring will not be broken, but the bandwidth of data traffic on the major ring may suffer for a short period of time due to this flooding behavior.

Example

```
Console(config-erps)#propagate-tc
Console(config-erps)#
```

raps-def-mac

This command sets the switch's MAC address to be used as the node identifier in R-APS messages. Use the **no** form to use the node identifier specified in the G8032 standards.

Syntax

[**no**] **raps-def-mac**

Default Setting
Enabled

Command Mode
ERPS Configuration

Command Usage
- When ring nodes running ERPSv1 and ERPSv2 co-exist on the same ring, the Ring ID of each ring node must be configured as "1".

- If this command is disabled, the following strings are used as the node identifier:
  - ERPSv1: 01-19-A7-00-00-01
  - ERPSv2: 01-19-A7-00-00-[Ring ID]

Example

```
Console(config-erps)#raps-def-mac
Console(config-erps)#
```

raps-without-vc

This command terminates the R-APS channel at the primary ring to sub-ring interconnection nodes. Use the **no** form to restore the default setting.

Syntax

[**no**] **raps-without-vc**

Default Setting

R-APS with Virtual Channel

Command Mode

ERPS Configuration

Command Usage

- A sub-ring may be attached to a primary ring with or without a virtual channel. A virtual channel is used to connect two interconnection points on the sub-ring, tunneling R-APS control messages across an arbitrary Ethernet network topology. If a virtual channel is not used to cross the intermediate Ethernet network, data in the traffic channel will still flow across the network, but the all R-APS messages will be terminated at the interconnection points.

- Sub-ring with R-APS Virtual Channel – When using a virtual channel to tunnel R-APS messages between interconnection points on a sub-ring, the R-APS virtual channel may or may not follow the same path as the traffic channel over the network. R-APS messages that are forwarded over the sub-ring's virtual channel are broadcast or multicast over the interconnected network. For this reason the broadcast/multicast domain of the virtual channel should be limited to the necessary links and nodes. For example, the virtual channel could span only the interconnecting rings or sub-rings that are necessary for forwarding R-APS messages of this sub-ring. Care must also be taken to ensure that the local RAPS messages of the sub-ring being transported over the virtual channel into the interconnected network can be uniquely distinguished from those of other interconnected ring R-APS messages. This can be achieved by, for example, by using separate VIDs for the virtual channels of different sub-rings.

  Note that the R-APS virtual channel requires a certain amount of bandwidth to forward R-APS messages on the interconnected Ethernet network where a sub-ring is attached. Also note that the protection switching time of the sub-ring may be affected if R-APS messages traverse a long distance over an R-APS virtual channel.

Figure 3: Sub-ring with Virtual Channel

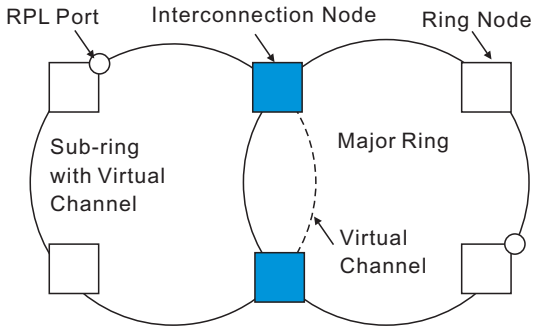

- Sub-ring without R-APS Virtual Channel – Under certain circumstances it may not be desirable to use a virtual channel to interconnect the sub-ring over an arbitrary Ethernet network. In this situation, the R-APS messages are terminated on the interconnection points. Since the sub-ring does not provide an R-APS channel nor R-APS virtual channel beyond the interconnection points, R-APS channel blocking is not employed on the normal ring links to avoid channel segmentation. As a result, a failure at any ring link in the sub-ring will cause the R-APS channel of the sub-ring to be segmented, thus preventing R-APS message exchange between some of the sub-ring's ring nodes.

  No R-APS messages are inserted or extracted by other rings or sub- rings at the interconnection nodes where a sub-ring is attached. Hence there is no need for either additional bandwidth or for different VIDs/Ring IDs for the ring interconnection. Furthermore, protection switching time for a sub-ring is independent from the configuration or topology of the interconnected rings. In addition, this option always ensures that an interconnected network forms a tree topology regardless of its interconnection configuration. This means that it is not necessary to take precautions against forming a loop which is potentially composed of a whole interconnected network.

Figure 4: Sub-ring without Virtual Channel

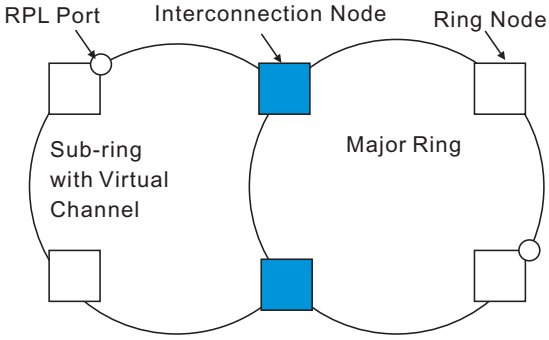

Example

```
Console(config-erps)#raps-without-vc
Console(config-erps)#
```

ring-port

This command configures a node's connection to the ring through the east or west interface. Use the **no** form to disassociate a node from the ring.

Syntax

ring-port {**east** | **west**} **interface** *interface*

east - Connects to next ring node to the east.

west - Connects to next ring node to the west.

interface

ethernet *unit/port*

unit - Unit identifier. (Range: 1)

port - Port number. (Range: 1-52)

port-channel *channel-id* (Range: 1-8)

Default Setting

Not associated

Command Mode

ERPS Configuration

Command Usage

- Each node must be connected to two neighbors on the ring. For convenience, the ports connected are referred to as east and west ports. Alternatively, the closest neighbor to the east should be the next node in the ring in a clockwise direction, and the closest neighbor to the west should be the next node in the ring in a counter-clockwise direction.
- Note that a ring port cannot be configured as a member of a spanning tree, a dynamic trunk, or a static trunk.
- If a port channel (static trunk) is specified as a ring port, it can not be destroyed before it is removed from the domain configuration.
- A static trunk will be treated as a signal fault, if it contains no member ports or all of its member ports are in signal fault.
- If a static trunk is configured as a ring port prior to assigning any member ports, spanning tree will be disabled for the first member port assigned to the static trunk.

Example

```
Console(config-erps)#ring-port east interface ethernet 1/12
Console(config-erps)#
```

rpl neighbor

This command configures a ring node to be the Ring Protection Link (RPL) neighbor. Use the **no** form to restore the default setting.

Syntax

rpl neighbor

no rpl

Default Setting

None (that is, neither owner nor neighbor)

Command Mode

ERPS Configuration

Command Usage

- The RPL neighbor node, when configured, is a ring node adjacent to the RPL that is responsible for blocking its end of the RPL under normal conditions (i.e., the ring is established and no requests are present in the ring) in addition to the block at the other end by the RPL Owner Node. The RPL neighbor node may participate in blocking or unblocking its end of the RPL, but is not responsible for activating the reversion behavior.

- Only one RPL owner can be configured on a ring. If the switch is set as the RPL owner for an ERPS domain, the west ring port is set as one end of the RPL. If the switch is set as the RPL neighbor for an ERPS domain, the east ring port is set as the other end of the RPL.

- The east and west connections to the ring must be specified for all ring nodes using the ring-port command. When this switch is configured as the RPL neighbor, the east ring port is set as being connected to the RPL.

- Note that is not mandatory to declare a RPL neighbor.

Example

```
Console(config-erps)#rpl neighbor
Console(config-erps)#
```

rpl owner

This command configures a ring node to be the Ring Protection Link (RPL) owner. Use the **no** form to restore the default setting.

Syntax

rpl owner

no rpl

Default Setting

None (that is, neither owner nor neighbor)

Command Mode
ERPS Configuration

Command Usage
- Only one RPL owner can be configured on a ring. The owner blocks traffic on the RPL during Idle state, and unblocks it during Protection state (that is, when a signal fault is detected on the ring or the protection state is enabled with the erps forced-switch or erps manual-switch command).

- The east and west connections to the ring must be specified for all ring nodes using the ring-port command. When this switch is configured as the RPL owner, the west ring port is automatically set as being connected to the RPL.

Example

```
Console(config-erps)#rpl owner
Console(config-erps)#
```

version

This command specifies compatibility with ERPS version 1 or 2.

Syntax

version {**1** | **2**}

1 - ERPS version 1 based on ITU-T G.8032/Y.1344.

2 - ERPS version 2 based on ITU-T G.8032/Y.1344 Version 2.

Default Setting
2

Command Mode
ERPS Configuration

Command Usage
- In addition to the basic features provided by version 1, version 2 also supports:
  - Multi-ring/ladder network support
  - Revertive/Non-revertive recovery
  - Forced Switch (FS) and Manual Switch (MS) commands for manually blocking a particular ring port
  - Flush FDB (forwarding database) logic which reduces amount of flush FDB operations in the ring
  - Support of multiple ERP instances on a single ring

- Version 2 is backward compatible with Version 1. If version 2 is specified, the inputs and commands are forwarded transparently. If set to version 1, MS and FS operator commands are filtered, and the switch set to revertive mode.

- The version number is automatically set to "1" when a ring node, supporting only the functionalities of G.8032v1, exists on the same ring with other nodes that support G.8032v2.
- When ring nodes running G.8032v1 and G.8032v2 co-exist on a ring, the ring ID of each node is configured as "1".
- In version 1, the MAC address 01-19-A7-00-00-01 is used for the node identifier. The raps-def-mac command has no effect.

Example

```
Console(config-erps)#version 1
Console(config-erps)#
```

wtr-timer

This command sets the wait-to-restore timer which is used to verify that the ring has stabilized before blocking the RPL after recovery from a signal failure. Use the **no** form to restore the default setting.

Syntax

wtr-timer *minutes*

minutes - The wait-to-restore timer is used to verify that the ring has stabilized before blocking the RPL after recovery from a signal failure. (Range: 5-12 minutes)

Default Setting

5 minutes

Command Mode

ERPS Configuration

Command Usage

If the switch goes into ring protection state due to a signal failure, after the failure condition is cleared, the RPL owner will start the wait-to-restore timer and wait until it expires to verify that the ring has stabilized before blocking the RPL and returning to the Idle (normal operating) state.

Example

```
Console(config-erps)#wtr-timer 10
Console(config-erps)#
```

clear erps statistics

This command clears statistics, including SF, NR, NR-RB, FS, MS, Event, and Health protocol messages.

Syntax

clear erps statistics [**domain** *ring-name*]

ring-name - Name of a specific ERPS ring. (Range: 1-12 characters)

Command Mode

Privileged Exec

Example

```
Console#clear erps statistics domain r&d
Console#
```

erps clear

This command manually clears the protection state which has been invoked by a forced switch or manual switch command, and the node is operating under non-revertive mode; or before the WTR or WTB timer expires when the node is operating in revertive mode.

Syntax

erps clear domain *ring-name*

ring-name - Name of a specific ERPS ring. (Range: 1-12 characters)

Command Mode

Privileged Exec

Command Usage

- Two steps are required to make a ring operating in non-revertive mode return to Idle state from forced switch or manual switch state:

  1. Issue an **erps clear** command to remove the forced switch command on the node where a local forced switch command is active.

  2. Issue an **erps clear** command on the RPL owner node to trigger the reversion.

- The **erps clear** command will also stop the WTR and WTB delay timers and reset their values.

- More detailed information about using this command for non-revertive mode is included under the Command Usage section for the non-revertive command.

Example

```
Console#erps clear domain r&d
Console#
```

erps forced-switch

This command blocks the specified ring port.

Syntax

erps forced-switch [**domain** *ring-name*] {**east** | **west**}

ring-name - Name of a specific ERPS ring. (Range: 1-12 characters)

east - East ring port.

west - West ring port.

Command Mode

Privileged Exec

Command Usage

- A ring with no pending request has a logical topology with the traffic channel blocked at the RPL and unblocked on all other ring links. In this situation, the **erps forced-switch** command triggers protection switching as follows:

  a. The ring node where a forced switch command was issued blocks the traffic channel and R-APS channel on the ring port to which the command was issued, and unblocks the other ring port.

  b. The ring node where the forced switch command was issued transmits R-APS messages indicating FS over both ring ports. R-APS (FS) messages are continuously transmitted by this ring node while the local FS command is the ring node's highest priority command (see Table 98 on page 503). The R-APS (FS) message informs other ring nodes of the FS command and that the traffic channel is blocked on one ring port.

  c. A ring node accepting an R-APS (FS) message, without any local higher priority requests unblocks any blocked ring port. This action subsequently unblocks the traffic channel over the RPL.

  d. The ring node accepting an R-APS (FS) message, without any local higher priority requests stops transmission of R-APS messages.

  e. The ring node receiving an R-APS (FS) message flushes its FDB.

- Protection switching on a forced switch request is completed when the above actions are performed by each ring node. At this point, traffic flows around the ring are resumed. From this point on the following rules apply regarding processing of further forced switch commands:

While an existing forced switch request is present in a ring, any new forced switch request is accepted, except on a ring node having a prior local forced switch request. The ring nodes where further forced switch commands are issued block the traffic channel and R-APS channel on the ring port at which the forced switch was issued. The ring node where the forced switch command was issued transmits an R-APS message over both ring ports indicating FS. R-APS (FS) messages are continuously transmitted by this ring node while the local FS command is the ring node's highest priority command. As such, two or more forced switches are allowed in the ring, which may inadvertently cause the segmentation of an ring. It is the responsibility of the operator to prevent this effect if it is undesirable.

Ring protection requests, commands and R-APS signals have the priorities as specified in the following table.

Table 98: ERPS Request/State Priority

Request / State and Status	Type	Priority
Clear	local	highest
FS	local	|
R-APS (FS)	remote	|
local SF*	local	|
local clear SF	local	|
R-APS (SF)	remote	|
R-APS (MS)	remote	|
MS	local	|
WTR Expires	local	|
WTR Running	local	|
WTB Expires	local	|
WTB Running	local	|
R-APS (NR, RB)	remote	|
R-APS (NR)	remote	lowest

* If an Ethernet Ring Node is in the Forced Switch state, local SF is ignored.

- Recovery for forced switching under revertive and non-revertive mode is described under the Command Usage section for the non-revertive command.

- When a ring is under an FS condition, and the node at which an FS command was issued is removed or fails, the ring remains in FS state because the FS command can only be cleared at node where the FS command was issued. This results in an unrecoverable FS condition.

  When performing a maintenance procedure (e.g., replacing, upgrading) on a ring node (or a ring link), it is recommended that FS commands be issued at the two adjacent ring nodes instead of directly issuing a FS command at the ring

node under maintenance in order to avoid falling into the above mentioned unrecoverable situation.

Example

```
Console#erps forced-switch domain r&d west
Console#
```

erps manual-switch

This command blocks the specified ring port, in the absence of a failure or an erps forced-switch command.

Syntax

erps manual-switch [**domain** *ring-name*] {**east** | **west**}

ring-name - Name of a specific ERPS ring. (Range: 1-12 characters)

east - East ring port.

west - West ring port.

Command Mode

Privileged Exec

Command Usage

- A ring with no request has a logical topology with the traffic channel blocked at the RPL and unblocked on all other ring links. In this situation, the **erps manual-switch** command triggers protection switching as follows:

  a. If no other higher priority commands exist, the ring node, where a manual switch command was issued, blocks the traffic channel and R-APS channel on the ring port to which the command was issued, and unblocks the other ring port.

  b. If no other higher priority commands exist, the ring node where the manual switch command was issued transmits R-APS messages over both ring ports indicating MS. R-APS (MS) message are continuously transmitted by this ring node while the local MS command is the ring node's highest priority command (see Table 98 on page 503). The R-APS (MS) message informs other ring nodes of the MS command and that the traffic channel is blocked on one ring port.

  c. If no other higher priority commands exist and assuming the ring node was in Idle state before the manual switch command was issued, the ring node flushes its local FDB.

  d. A ring node accepting an R-APS (MS) message, without any local higher priority requests unblocks any blocked ring port which does not have an SF condition. This action subsequently unblocks the traffic channel over the RPL.

e. A ring node accepting an R-APS (MS) message, without any local higher priority requests stops transmitting R-APS messages.

f. A ring node receiving an R-APS (MS) message flushes its FDB.

- Protection switching on a manual switch request is completed when the above actions are performed by each ring node. At this point, traffic flows around the ring are resumed. From this point on, the following rules apply regarding processing of further manual switch commands:

  a. While an existing manual switch request is present in the ring, any new manual switch request is rejected. The request is rejected at the ring node where the new request is issued and a notification is generated to inform the operator that the new MS request was not accepted.

  b. A ring node with a local manual switch command which receives an R-APS (MS) message with a different Node ID clears its manual switch request and starts transmitting R-APS (NR) messages. The ring node keeps the ring port blocked due to the previous manual switch command.

  c. An ring node with a local manual switch command that receives an R-APS message or a local request of higher priority than R-APS (MS) clear its manual switch request. The ring node then processes the new higher priority request.

- Recovery for manual switching under revertive and non-revertive mode is described under the Command Usage section for the non-revertive command.

Example

```
Console#erps manual-switch domain r&d west
Console#
```

show erps

This command displays status information for all configured rings, or for a specified ring

Syntax

show erps [**domain** *ring-name*] [**statistics**]

domain - Keyword to display ERPS ring configuration settings.

ring-name - Name of a specific ERPS ring. (Range: 1-32 characters)

statistics - Keyword to display ERPS ring statistics.

Command Mode

Privileged Exec

Example

This example displays a summary of all the ERPS rings configured on the switch.

```
Console#show erps
ERPS Status              : Enabled
Number of ERPS Domains   : 1

Domain       ID  Enabled Ver MEL Ctrl VLAN State      Type         Revertive
------------ --- ------- --- --- --------- ---------- ------------ ---------
r&d            1 Yes       2   1         1 Idle       RPL Owner    Yes

             W/E  Interface Port State Local SF Local FS Local MS MEP  RPL
             ---- --------- ---------- -------- -------- -------- ---- ---
             West Eth 1/ 1  Blocking   No       No       No            Yes
             East Eth 1/ 3  Forwarding No       No       No            No

Console#
```

Table 99: show erps - summary display description

Field	Description
Node Information	
ERPS Status	Shows whether ERPS is enabled on the switch.
Number of ERPS Domains	Shows the number of ERPS rings configured on the switch.
Domain	Displays the name of each ring followed by a brief list of status information
ID	ERPS ring identifier used in R-APS messages.
Enabled	Shows if the specified ring is enabled.
Ver	Shows the ERPS version.
MEL	The maintenance entity group (MEG) level providing a communication channel for ring automatic protection switching (R-APS) information.
Ctrl VLAN	Shows the Control VLAN ID.
State	Shows the following ERPS states: Init – The ERPS ring has started but has not yet determined the status of the ring. Idle – If all nodes in a ring are in this state, it means that all the links in the ring are up. This state will switch to protection state if a link failure occurs. Protection – If a node in this state, it means that a link failure has occurred. This state will switch to idle state if all the failed links recover.
Type	Shows ERPS node type as None, RPL Owner or RPL Neighbor.
Revertive	Shows if revertive or non-revertive recovery is selected.
Interface Information	
W/E	Shows information on the west and east ring port for this node.
Interface	The port or trunk which is configured as a ring port.

Table 99: show erps - summary display description (Continued)

Field	Description
Port State	The operational state: Blocking – The transmission and reception of traffic is blocked and the forwarding of R-APS messages is blocked, but the transmission of locally generated R-APS messages is allowed and the reception of all R-APS messages is allowed. Forwarding – The transmission and reception of traffic is allowed; transmission, reception and forwarding of R-APS messages is allowed. Unknown – The interface is not in a known state (includes the domain being disabled).
Local SF	A signal fault generated on a link to the local node.
Local FS	Shows if a forced switch command was issued on this interface.
Local MS	Shows if a manual switch command was issued on this interface.
MEP	The CFM MEP used to monitor the status on this link.
RPL	Shows if this node is connected to the RPL.

This example displays detailed information for the specified ERPS ring.

```
Console#show erps domain rd1
Domain       ID  Enabled Ver MEL Ctrl VLAN State      Type         Revertive
------------ --- ------- --- --- --------- ---------- ------------ ---------
r&d            1 Yes       2   1         1 Idle       RPL Owner    Yes

             Major Domain Node ID           R-APS With VC
             ------------ ----------------- -------------
                          00-E0-0C-00-00-FD Yes

             R-APS Def MAC Propagate TC Non-ERPS Device Protect
             ------------- ------------ -----------------------
             Yes           No           No

             Holdoff  Guard   WTB     WTR     WTB Expire WTR Expire
             -------- ------- ------- ------- ---------- ----------
                 0 ms  500 ms 5500 ms   5 min

             W/E  Interface Port State Local SF Local FS Local MS MEP  RPL
             ---- --------- ---------- -------- -------- -------- ---- ---
             West Eth 1/ 1  Blocking   No       No       No            Yes
             East Eth 1/ 3  Forwarding No       No       No            No

Console#
```

Table 99 on page 506 describes most of the parameters shown by **show erps domain** command. The following table includes the remaining parameters.

Table 100: show erps domain - detailed display description

Field	Description
Major Domain	Name of the ERPS major domain.
Node ID	A MAC address unique to this ring node.

Table 100: show erps domain - detailed display description (Continued)

Field	Description
R-APS with VC	The R-APS Virtual Channel is the R-APS channel connection used to tunnel R-APS messages between two interconnection nodes of a sub-ring in another Ethernet ring or network.
R-APS Def MAC	Indicates if the switch's MAC address is used to identify the node in R-APS messages.
Propagate TC	Shows if the ring is configured to propagate topology change notification messages.
Non-ERPS Device Protect	Shows if the RPL owner node is configured to send non-standard health-check packets when it enters protection state without any link down event having been detected through SF messages
Holdoff	The hold-off timer interval used to filter out intermittent link faults.
Guard	The guard timer interval used to prevent ring nodes from receiving outdated R-APS messages.
WTB	The wait-to-block timer interval used to delay reversion after a Forced Switch or Manual Switch has been cleared.
WTR	The wait-to-restore timer interval used to verify that the ring has stabilized before blocking the RPL after recovery from a signal failure.
WTB Expire	The time before the wait-to-block timer expires.
WTR Expire	The time before the wait-to-restore timer expires.

This example displays statistics for all configured ERPS rings.

```
Console#show erps statistics
ERPS statistics for domain r&d :
Interface    Local SF   Local Clear SF
------------ ---------- --------------
(W) Eth 1/ 1 0          0
             SF         NR         NR-RB      FS         MS
             ---------- ---------- ---------- ---------- ----------
    Sent              0         62        948          0          0
    Received          0          0          0          0          0
    Ignored           0          0          0          0          0
             EVENT      HEALTH
             ---------- ----------
    Sent              0          0
    Received          0          0
    Ignored           0          0

Interface    Local SF   Local Clear SF
------------ ---------- --------------
(E) Eth 1/ 3 0          0
             SF         NR         NR-RB      FS         MS
             ---------- ---------- ---------- ---------- ----------
    Sent              0         62        948          0          0
    Received          0          0          0          0          0
    Ignored           0          0          0          0          0
             EVENT      HEALTH
             ---------- ----------
    Sent              0          0
    Received          0          0
    Ignored           0          0
Console#
```

Table 101: show erps statistics - detailed display description

Field	Description
Interface	The direction, and port or trunk which is configured as a ring port.
Local SF	A signal fault generated on a link to the local node.
Local Clear SF	The number of times a clear command was issued to terminate protection state entered through a forced switch or manual switch
SF	The number of signal fault messages
NR	The number of no request messages
NR-RB	The number no request - RPL blocked messages
FS	The number of forced switch messages
MS	The number of manual switch messages
EVENT	Any request/state message, excluding FS, SF, MS, and NR
HEALTH	The number of non-standard health-check messages

20 Class of Service Commands

The commands described in this section allow you to specify which data packets have greater precedence when traffic is buffered in the switch due to congestion. This switch supports CoS with eight priority queues for each port. Data packets in a port's high-priority queue will be transmitted before those in the lower-priority queues. The default priority can be set for each interface, also the queue service mode and the mapping of frame priority tags to the switch's priority queues can be configured.

Table 102: Priority Commands

Command Group	Function
Priority Commands (Layer 2)	Configures the queue mode, queue weights, and default priority for untagged frames
Priority Commands (Layer 3 and 4)	Sets the default priority processing method (CoS or DSCP), maps priority tags for internal processing, maps values from internal priority table to CoS values used in tagged egress packets for Layer 2 interfaces, maps internal per hop behavior to hardware queues

Priority Commands (Layer 2)

This section describes commands used to configure Layer 2 traffic priority on the switch.

Table 103: Priority Commands (Layer 2)

Command	Function	Mode
queue mode	Sets the queue mode to Weighted Round-Robin (WRR), strict priority, or a combination of strict and weighted queuing	IC
queue weight	Assigns round-robin weights to the priority queues	IC
switchport priority default	Sets a port priority for incoming untagged frames	IC
show interfaces switchport	Displays the administrative and operational status of an interface	PE
show queue mode	Shows the current queue mode	PE
show queue weight	Shows weights assigned to the weighted queues	PE

queue mode

This command sets the scheduling mode used for processing each of the class of service (CoS) priority queues. The options include strict priority, Weighted Round-Robin (WRR), or a combination of strict and weighted queuing. Use the **no** form to restore the default value.

Syntax

queue mode {**strict** | **wrr** | **strict-wrr** [*queue-type-list*]}

no queue mode

strict - Services the egress queues in sequential order, transmitting all traffic in the higher priority queues before servicing lower priority queues. This ensures that the highest priority packets are always serviced first, ahead of all other traffic.

wrr - Weighted Round-Robin shares bandwidth at the egress ports by using scheduling weights (based on the queue weight command), and servicing each queue in a round-robin fashion.

strict-wrr - Uses strict or weighted service as specified for each queue.

queue-type-list - Indicates if the queue is a normal or strict type. (Options: 0 indicates a normal queue, 1 indicates a strict queue)

Default Setting

WRR

Command Mode

Interface Configuration (Ethernet, Port Channel)

Command Usage

- The switch can be set to service the port queues based on strict priority, WRR, or a combination of strict and weighted queueing.
- Strict priority requires all traffic in a higher priority queue to be processed before lower priority queues are serviced.
- Weighted Round Robin (WRR) uses a predefined relative weight for each queue that determines the percentage of service time the switch services each queue before moving on to the next queue. This prevents the head-of-line blocking that can occur with strict priority queuing. Use the queue weight command to assign weights for WRR queuing to the eight priority queues.
- If Strict and WRR mode is selected, a combination of strict and weighted service is used as specified for each queue. The queues assigned to use strict or WRR priority should be specified using the *queue-type-list* parameter.
- A weight can be assigned to each of the weighted queues (and thereby to the corresponding traffic priorities). This weight sets the frequency at which each queue is polled for service, and subsequently affects the response time for software applications assigned a specific priority value.

- Service time is shared at the egress ports by defining scheduling weights for WRR, or for the queuing mode that uses a combination of strict and weighted queuing. Service time is allocated to each queue by calculating a precise number of bytes per second that will be serviced on each round.
- The specified queue mode applies to all interfaces.

Example

The following example sets the queue mode to strict priority service mode:

```
Console(config)#interface ethernet 1/1
Console(config-if)#queue mode strict
Console(config-ip)#
```

Related Commands

queue weight (513)
show queue mode (515)

queue weight

This command assigns weights to the eight class of service (CoS) priority queues when using weighted queuing, or one of the queuing modes that use a combination of strict and weighted queuing. Use the **no** form to restore the default weights.

Syntax

queue weight *weight0...weight7*

no queue weight

weight0...weight7 - The ratio of weights for queues 0 - 7 determines the weights used by the WRR scheduler. (Range: 1-255)

Default Setting

Weights 1, 2, 4, 6, 8, 10, 12, 14 are assigned to queues 0 - 7 respectively.

Command Mode

Interface Configuration (Ethernet, Port Channel)

Command Usage

- This command shares bandwidth at the egress port by defining scheduling weights for Weighted Round-Robin, or for the queuing mode that uses a combination of strict and weighted queuing (page 512).
- Bandwidth is allocated to each queue by calculating a precise number of bytes per second that will be serviced on each round.

Example

The following example shows how to assign round-robin weights of 1 - 8 to the CoS priority queues 0 - 7.

```
Console(config)#interface ethernet 1/1
Console(config-if)#queue weight 1 2 3 4 5 6 7 8
Console(config-if)#
```

Related Commands

queue mode (512)
show queue weight (515)

switchport priority default

This command sets a priority for incoming untagged frames. Use the **no** form to restore the default value.

Syntax

switchport priority default *default-priority-id*

no switchport priority default

default-priority-id - The priority number for untagged ingress traffic. The priority is a number from 0 to 7. Seven is the highest priority.

Default Setting

The priority is not set, and the default value for untagged frames received on the interface is zero.

Command Mode

Interface Configuration (Ethernet, Port Channel)

Command Usage

- The precedence for priority mapping is IP DSCP, and then default switchport priority.
- The default priority applies for an untagged frame received on a port set to accept all frame types (i.e, receives both untagged and tagged frames). This priority does not apply to IEEE 802.1Q VLAN tagged frames. If the incoming frame is an IEEE 802.1Q VLAN tagged frame, the IEEE 802.1p User Priority bits will be used.
- The switch provides eight priority queues for each port. It can be configured to use strict priority queuing, Weighted Round Robin (WRR), or a combination of strict and weighted queuing using the queue mode command. Inbound frames that do not have VLAN tags are tagged with the input port's default ingress user priority, and then placed in the appropriate priority queue at the output port. The default priority for all ingress ports is zero. Therefore, any inbound frames that do not have priority tags will be placed in queue 2 of the output

port. (Note that if the output port is an untagged member of the associated VLAN, these frames are stripped of all VLAN tags prior to transmission.)

Example

The following example shows how to set a default priority on port 3 to 5:

```
Console(config)#interface ethernet 1/3
Console(config-if)#switchport priority default 5
Console(config-if)#
```

Related Commands

show interfaces switchport (365)

show queue mode

This command shows the current queue mode.

Command Mode

Privileged Exec

Example

```
Console#show queue mode
Unit    Port    queue mode
----    ----    ---------------
   1       1    Weighted Round Robin
...
```

show queue weight

This command displays the weights used for the weighted queues.

Command Mode

Privileged Exec

Example

```
Console#show queue weight
Information of Eth 1/1
 Queue ID  Weight
 --------  ------
        0       1
        1       2
        2       4
        3       6
        4       8
        5      10
        6      12
        7      14
...
```

Priority Commands (Layer 3 and 4)

This section describes commands used to configure Layer 3 and 4 traffic priority mapping on the switch.

Table 104: Priority Commands (Layer 3 and 4)

Command	Function	Mode
qos map cos-queue	Maps CoS/CFI values in incoming packets to per-hop behavior, or the queue used for this router hop	IC
qos map dscp-queue	Maps DSCP values in incoming packets to per-hop behavior, or the queue used for this router hop	IC
qos map trust-mode	Sets QoS mapping to DSCP or CoS	IC
show qos map cos-queue	Shows ingress CoS to egress queue map	PE
show qos map dscp-queue	Shows ingress DSCP to eqress queue map	PE
show qos map trust-mode	Shows the QoS mapping mode	PE

* The default settings used for mapping priority values to internal DSCP values and back to the hardware queues are designed to optimize priority services for the majority of network applications. It should not be necessary to modify any of the default settings unless a queuing problem occurs with a particular application.

qos map cos-queue

This command maps CoS/CFI values in incoming packets to per-hop behavior for priority processing. Use the **no** form to restore the default settings.

Syntax

qos map cos-queue *queue* **from** *cos0 cfi0...cos7 cfi7*

no qos map cos-dscp *cos0 cfi0...cos7 cfi7*

queue - Per-hop behavior, or the priority used for this router hop. (Range: 0-7)

cos - CoS value in ingress packets. (Range: 0-7)

cfi - Canonical Format Indicator. Set this parameter to “0” to indicate that the MAC address information carried in the frame is in canonical format. (Range: 0-1)

Default Setting

Table 105: Default Mapping of CoS/CFI Values to Queue/CFI

CoS \ CFI	0	1
0	(2,0)	(2,0)
1	(0,0)	(0,0)
2	(1,0)	(1,0)
3	(3,0)	(3,0)
4	(4,0)	(4,0)
5	(5,0)	(5,0)
6	(6,0)	(6,0)
7	(7,0)	(7,0)

Command Mode

Interface Configuration (Ethernet, Port Channel)

Command Usage

- The default mapping of CoS/CFI to Queue/CFI values shown in Table 105 is based on the recommended settings in IEEE 802.1p for mapping CoS values to output queues.
- Enter a value for the per-hop behavior, followed by the keyword “from” and then up to eight CoS/CFI paired values separated by spaces.
- If a packet arrives with a 802.1Q header but it is not an IP packet, then the CoS/CFI-to-Queue mapping table is used to generate priority for processing. Note that priority tags in the original packet are not modified by this command.

Example

```
Console(config)#interface ethernet 1/2
Console(config-if)#qos map cos-dscp 0 0 from 0 1
Console(config-if)#
```

qos map dscp-queue

This command maps DSCP values in incoming packets to per-hop behavior for priority processing. Use the **no** form to restore the default settings.

Syntax

qos map dscp-queue *dscp-queue* **from** *dscp0 ... dscp7*

no qos map dscp-queue *dscp0 ... dscp7*

dscp-queue - Per-hop behavior, or the priority used for this router hop. (Range: 0-7)

dscp - DSCP value in ingress packets. (Range: 0-63)

Default Setting

Table 106: Default Mapping of DSCP/CFI Values to Queue

ingress-dscp10 \ ingress-dscp1	0	1	2	3	4	5	6	7	8	9
0	0,0	0,1	0,0	0,3	0,0	0,1	0,0	0,3	1,0	1,1
1	1,0	1,3	1,0	1,1	1,0	1,3	2,0	2,1	2,0	2,3
2	2,0	2,1	2,0	2,3	3,0	3,1	3,0	3,3	3.0	3,1
3	3,0	3,3	4,0	4,1	4,0	4,3	4,0	4,1	4.0	4,3
4	5,0	5,1	5,0	5,3	5,0	5,1	6,0	5,3	6,0	6,1
5	6,0	6,3	6,0	6,1	6,0	6,3	7,0	7,1	7.0	7,3
6	7,0	7,1	7,0	7,3						

The ingress DSCP is composed of ingress-dscp10 (most significant digit in the left column) and ingress-dscp1 (least significant digit in the top row (in other words, ingress-dscp = ingress-dscp10 * 10 + ingress-dscp1); and the corresponding dscp is shown at the intersecting cell in the table.

Command Mode

Interface Configuration (Ethernet, Port Channel)

Command Usage

- Enter a value for the per-hop behavior, followed by the keyword “from” and then up to eight DSCP values separated by spaces.
- This map is only used when the QoS mapping mode is set to “DSCP” by the qos map trust-mode command, and the ingress packet type is IPv4.
- Two QoS domains can have different DSCP definitions, so the DSCP-to-Queue/map can be used to modify one set of DSCP values to match the definition of another domain. This map should be applied at the receiving port at the boundary of a QoS administrative domain.

Example

This example changes the priority for all packets entering port 1 which contain a DSCP value of 1 to a per-hop behavior of 3.

```
Console(config)#interface ethernet 1/2
Console(config-if)#qos map dscp-queue 3 from 1
Console(config-if)#
```

qos map trust-mode

This command sets QoS mapping to DSCP or CoS. Use the **no** form to restore the default setting.

Syntax

qos map trust-mode {**dscp** | **cos**}

no qos map trust-mode

dscp - Sets the QoS mapping mode to DSCP.

cos - Sets the QoS mapping mode to CoS.

Default Setting

CoS

Command Mode

Interface Configuration (Ethernet, Port Channel)

Command Usage

- If the QoS mapping mode is set to DSCP with this command, and the ingress packet type is IPv4, then priority processing will be based on the DSCP value in the ingress packet.

- If the QoS mapping mode is set to DSCP, and a non-IP packet is received, the packet's CoS and CFI (Canonical Format Indicator) values are used for priority processing if the packet is tagged. For an untagged packet, the default port priority (see page 514) is used for priority processing.

- If the QoS mapping mode is set to CoS with this command, and the ingress packet type is IPv4, then priority processing will be based on the CoS and CFI values in the ingress packet.

  For an untagged packet, the default port priority (see page 514) is used for priority processing.

Example

This example sets the QoS priority mapping mode to use DSCP based on the conditions described in the Command Usage section.

```
Console(config)#interface 1/1
Console(config-if)#qos map trust-mode cos
Console(config-if)#
```

show qos map cos-queue

This command shows the ingress CoS to eqress queue map.

Syntax

show qos map cos-queue interface *interface*

interface

ethernet *unit/port*

unit - Unit identifier. (Range: 1)

port - Port number. (Range: 1-52)

Command Mode

Privileged Exec

Example

```
Console#show qos map cos-queue interface ethernet 1/1
CoS Information of Eth 1/1
 CoS-Queue map.
 CoS  : CFI  0          1
---------------------------------
 0           2          2
 1           0          0
 2           1          1
 3           3          3
 4           4          4
 5           5          5
 6           6          6
 7           7          7

Console#
```

show qos map dscp-queue

This command shows the ingress DSCP to eqress queue map.

Syntax

show qos map dscp-queue interface *interface*

interface

ethernet *unit/port*

unit - Unit identifier. (Range: 1)

port - Port number. (Range: 1-52)

Command Mode

Privileged Exec

Command Usage

This map is only used when the QoS mapping mode is set to "DSCP" by the qos map trust-mode command, and the ingress packet type is IPv4.

Example

The ingress DSCP is composed of ingress-dscp10 (most significant digit in the left column) and ingress-dscp1 (least significant digit in the top row (in other words, ingress-dscp = ingress-dscp10 * 10 + ingress-dscp1); and the corresponding dscp is shown at the intersecting cell in the table.

```
Console#show qos map dscp-queue interface ethernet 1/1
Information of Eth 1/1
 DSCP to queue map.
 d1:d2   0   1   2   3   4   5   6   7   8   9
 ---------------------------------------------
 0   :   2   2   2   2   2   2   2   2   0   0
 1   :   0   0   0   0   0   0   1   1   1   1
 2   :   1   1   1   1   3   3   3   3   3   3
 3   :   3   3   4   4   4   4   4   4   4   4
 4   :   5   5   5   5   5   5   5   5   6   6
 5   :   6   6   6   6   6   6   7   7   7   7
 6   :   7   7   7   7

Console#
```

show qos map trust-mode

This command shows the QoS mapping mode.

Syntax

show qos map trust-mode interface *interface*

interface

ethernet *unit/port*

unit - Unit identifier. (Range: 1)

port - Port number. (Range: 1-52)

Command Mode
Privileged Exec

Example
The following shows that the trust mode is set to CoS:

```
Console#show qos map trust-mode interface ethernet 1/5
Information of Eth 1/5
  CoS Map Mode:          CoS mode
Console#
```

21 Quality of Service Commands

The commands described in this section are used to configure Differentiated Services (DiffServ) classification criteria and service policies. You can classify traffic based on access lists, IP Precedence or DSCP values, or VLANs. Using access lists allows you select traffic based on Layer 2, Layer 3, or Layer 4 information contained in each packet.

Table 107: Quality of Service Commands

Command	Function	Mode
class-map	Creates a class map for a type of traffic	GC
description	Specifies the description of a class map	CM
match	Defines the criteria used to classify traffic	CM
rename	Redefines the name of a class map	CM
policy-map	Creates a policy map for multiple interfaces	GC
description	Specifies the description of a policy map	PM
class	Defines a traffic classification for the policy to act on	PM
rename	Redefines the name of a policy map	PM
police rate	Defines an enforcer for classified traffic based on the metered flow rate	PM-C
set cos	Services IP traffic by setting a class of service value for matching packets for internal processing	PM-C
service-policy	Applies a policy map defined by the policy-map command to a particular interface	IC
show class-map	Displays the QoS class maps which define matching criteria used for classifying traffic	PE
show policy-map	Displays the QoS policy maps which define classification criteria for ingress or egress traffic, and may include policers for bandwidth limitations	PE
show policy-map interface	Displays the configuration of all classes configured for all service policies on the specified interface	PE

To create a service policy for a specific category of ingress traffic, follow these steps:

1. Use the class-map command to designate a class name for a specific category of traffic, and enter the Class Map configuration mode.

2. Use the match command to select a specific type of traffic based on an access list, an IPv4 DSCP value, IPv4 Precedence value, IPv6 DSCP value, a VLAN, or a

CoS value. Note that a class map can include match settings for both IP values and a VLAN.

3. Use the policy-map command to designate a policy name for a specific manner in which ingress traffic will be handled, and enter the Policy Map configuration mode.

4. Use the class command to identify the class map, and enter Policy Map Class configuration mode. A policy map can contain up to 16 class maps.

5. Use the set cos command to modify the per-hop behavior, the class of service value in the VLAN tag for the matching traffic class, and use one of the **police** commands to monitor parameters such as the average flow and burst rate, and drop any traffic that exceeds the specified rate, or just reduce the DSCP service level for traffic exceeding the specified rate.

6. Use the service-policy command to assign a policy map to a specific interface.

Note: Create a Class Map before creating a Policy Map.

class-map

This command creates a class map used for matching packets to the specified class, and enters Class Map configuration mode. Use the **no** form to delete a class map.

Syntax

[**no**] **class-map** *class-map-name*

class-map-name - Name of the class map. (Range: 1-32 characters)

Default Setting

match-any

Command Mode

Global Configuration

Command Usage

- First enter this command to designate a class map and enter the Class Map configuration mode. Then use match commands to specify the criteria for ingress traffic that will be classified under this class map.

- One or more class maps can be assigned to a policy map (page 527). The policy map is then bound by a service policy to an interface (page 531). A service policy defines packet classification, service tagging, and bandwidth policing. Once a policy map has been bound to an interface, no additional class maps may be added to the policy map, nor any changes made to the assigned class maps with the match or **set** commands.

Example

This example creates a class map call "rd-class," and sets it to match packets marked for DSCP service value 3:

```
Console(config)#class-map rd-class
Console(config-cmap)#match cos 3
Console(config-cmap)#
```

Related Commands

show class-map (531)

description

This command specifies the description of a class map or policy map.

Syntax

description *string*

string - Description of the class map or policy map. (Range: 1-64 characters)

Command Mode

Class Map Configuration
Policy Map Configuration

Example

```
Console(config)#class-map rd-class#1
Console(config-cmap)#description "matches packets marked for DSCP service
  value 3"
Console(config-cmap)#
```

match

This command defines the criteria used to classify traffic. Use the **no** form to delete the matching criteria.

Syntax

[**no**] **match** {**access-list** *acl-name* | **cos** *cos* | **ip dscp** *dscp* | **ip precedence** *ip-precedence* | **ipv6 dscp** *dscp* | **vlan** *vlan*}

acl-name - Name of the access control list. Any type of ACL can be specified, including standard or extended IPv4/IPv6 ACLs and MAC ACLs. (Range: 1-16 characters)

cos - A Class of Service value. (Range: 0-7)

dscp - A Differentiated Service Code Point value. (Range: 0-63)

ip-precedence - An IP Precedence value. (Range: 0-7)

vlan - A VLAN. (Range:1-4094)

Default Setting

None

Command Mode

Class Map Configuration

Command Usage

- First enter the class-map command to designate a class map and enter the Class Map configuration mode. Then use **match** commands to specify the fields within ingress packets that must match to qualify for this class map.
- If an ingress packet matches an ACL specified by this command, any deny rules included in the ACL will be ignored.
- If match criteria includes an IP ACL or IP priority rule, then a VLAN rule cannot be included in the same class map.
- If match criteria includes a MAC ACL or VLAN rule, then neither an IP ACL nor IP priority rule can be included in the same class map.
- Up to 16 match entries can be included in a class map.

Example

This example creates a class map called “rd-class#1,” and sets it to match packets marked for DSCP service value 3.

```
Console(config)#class-map rd-class#1
Console(config-cmap)#match ip dscp 3
Console(config-cmap)#
```

This example creates a class map call “rd-class#2,” and sets it to match packets marked for IP Precedence service value 5.

```
Console(config)#class-map rd-class#2
Console(config-cmap)#match ip precedence 5
Console(config-cmap)#
```

This example creates a class map call “rd-class#3,” and sets it to match packets marked for VLAN 1.

```
Console(config)#class-map rd-class#3
Console(config-cmap)#match vlan 1
Console(config-cmap)#
```

rename

This command redefines the name of a class map or policy map.

Syntax

rename *map-name*

map-name - Name of the class map or policy map. (Range: 1-32 characters)

Command Mode

Class Map Configuration
Policy Map Configuration

Example

```
Console(config)#class-map rd-class#1
Console(config-cmap)#rename rd-class#9
Console(config-cmap)#
```

policy-map

This command creates a policy map that can be attached to multiple interfaces, and enters Policy Map configuration mode. Use the **no** form to delete a policy map.

Syntax

[**no**] **policy-map** *policy-map-name*

policy-map-name - Name of the policy map. (Range: 1-32 characters)

Default Setting

None

Command Mode

Global Configuration

Command Usage

- Use the **policy-map** command to specify the name of the policy map, and then use the class command to configure policies for traffic that matches the criteria defined in a class map.
- A policy map can contain multiple class statements that can be applied to the same interface with the service-policy command.
- Create a Class Map (page 527) before assigning it to a Policy Map.

Example

This example creates a policy called "rd-policy," uses the class command to specify the previously defined "rd-class," uses the **set** command to classify the service that incoming packets will receive.

```
Console(config)#policy-map rd-policy
Console(config-pmap)#class rd-class
Console(config-pmap-c)#set cos 0
Console(config-pmap-c)#
```

class

This command defines a traffic classification upon which a policy can act, and enters Policy Map Class configuration mode. Use the **no** form to delete a class map.

Syntax

[**no**] **class** *class-map-name*

class-map-name - Name of the class map. (Range: 1-32 characters)

Default Setting

None

Command Mode

Policy Map Configuration

Command Usage

- Use the policy-map command to specify a policy map and enter Policy Map configuration mode. Then use the **class** command to enter Policy Map Class configuration mode. And finally, use the **set** command and one of the **police** commands to specify the match criteria, where the:
  - set cos command sets the class of service value in matching packets. (This modifies packet priority in the VLAN tag.)
  - **police** commands define parameters such as the maximum throughput, burst rate, and response to non-conforming traffic.
- Up to 16 classes can be included in a policy map.

Example

This example creates a policy called "rd-policy," uses the **class** command to specify the previously defined "rd-class," uses the set cos command to classify the service that incoming packets will receive.

```
Console(config)#policy-map rd-policy
Console(config-pmap)#class rd-class
Console(config-pmap-c)#set cos 3
Console(config-pmap-c)#
```

police rate

This command defines an enforcer for classified traffic based on the metered flow rate. Use the **no** form to remove a policer.

Syntax

[**no**] **police rate** *committed-rate*

committed-rate - Committed information rate in kilobits per second. (Range: 16-1000000 kbps at a granularity of 64 kbps or maximum port speed, whichever is lower)

Default Setting

None

Command Mode

Policy Map Class Configuration

Command Usage

- You can configure up to 16 policers (i.e., class maps) for ingress ports.
- The *committed-rate* cannot exceed the configured interface speed.
- Policing is based on a token bucket, where bucket depth is the maximum burst before the bucket overflows, and the average rate tokens that are added to the bucket is by specified by the *committed-rate* option. Note that the token bucket functions similar to that described in RFC 2697 and RFC 2698.
- The behavior of the meter is specified in terms of one token bucket (C), the rate at which the tokens are incremented (CIR – Committed Information Rate), and the maximum size of the token bucket (BC – Committed Burst Size).

  The token bucket C is initially full, that is, the token count Tc(0) = BC. Thereafter, the token count Tc is updated CIR times per second as follows:

  - If Tc is less than BC, Tc is incremented by one, else
  - Tc is not incremented.

When a packet of size B bytes arrives at time t, the following happens:

- If Tc(t)-B ≥ 0, the packet is green and Tc is decremented by B down to the minimum value of 0,
- else the packet is red and Tc is not decremented.

Example

This example creates a policy called "rd-policy," uses the class command to specify the previously defined "rd-class," uses the set cos command to classify the service that incoming packets will receive, and then uses the **police rate** command to limit the average bandwidth to 100,000 Kbps.

```
Console(config)#policy-map rd-policy
Console(config-pmap)#class rd-class
Console(config-pmap-c)#set cos 3
Console(config-pmap-c)#police rate 100000
Console(config-pmap-c)#
```

set cos

This command modifies the class of service (CoS) value for a matching packet (as specified by the match command) in the packet's VLAN tag. Use the **no** form to remove this setting.

Syntax

[**no**] **set cos** *cos-value*

cos-value - Class of Service value. (Range: 0-7)

Default Setting

None

Command Mode

Policy Map Class Configuration

Command Usage

- The **set cos** command is used to set the CoS value in the VLAN tag for matching packets.

Example

This example creates a policy called "rd-policy," uses the class command to specify the previously defined "rd-class," uses the **set cos** command to classify the service that incoming packets will receive.

```
Console(config)#policy-map rd-policy
Console(config-pmap)#class rd-class
Console(config-pmap-c)#set cos 3
Console(config-pmap-c)#police flow 10000 4000 conform-action transmit
Console(config-pmap-c)#
```

service-policy

This command applies a policy map defined by the **policy-map** command to the ingress side of a particular interface. Use the **no** form to remove this mapping.

Syntax

[**no**] **service-policy input** *policy-map-name*

input - Apply to the input traffic.

policy-map-name - Name of the policy map for this interface. (Range: 1-32 characters)

Default Setting

No policy map is attached to an interface.

Command Mode

Interface Configuration (Ethernet, Port Channel)

Command Usage

- First define a class map, then define a policy map, and finally use the **service-policy** command to bind the policy map to the required interface.

Example

This example applies a service policy to an ingress interface.

```
Console(config)#interface ethernet 1/1
Console(config-if)#service-policy input rd-policy
Console(config-if)#
```

show class-map

This command displays the QoS class maps which define matching criteria used for classifying traffic.

Syntax

show class-map [*class-map-name*]

class-map-name - Name of the class map. (Range: 1-32 characters)

Default Setting

Displays all class maps.

Command Mode

Privileged Exec

Example

```
Console#show class-map
Class Map match-any rd-class#1
```

```
Description:
 Match ip dscp 10
 Match access-list rd-access
 Match ip dscp 0

Class Map match-any rd-class#2
 Match ip precedence 5

Class Map match-any rd-class#3
 Match vlan 1

Console#
```

show policy-map

This command displays the QoS policy maps which define classification criteria for ingress or egress traffic, and may include policers for bandwidth limitations.

Syntax

show policy-map [*policy-map-name* [**class** *class-map-name*]]

policy-map-name - Name of the policy map. (Range: 1-32 characters)

class-map-name - Name of the class map. (Range: 1-32 characters)

Default Setting

Displays all policy maps and all classes.

Command Mode

Privileged Exec

Example

```
Console#show policy-map
Policy Map rd-policy
Description:
 class rd-class
 set PHB 3
 class finance-class
  police rate 100 class rd-class
Policy Map rd-policy
 class rd-class
  set PHB 3
Console#
```

show policy-map interface

This command displays the service policy assigned to the specified interface.

Syntax

show policy-map interface [*interface* **input**]

interface

unit/port

unit - Unit identifier. (Range: 1)

port - Port number. (Range: 1-52)

Command Mode

Privileged Exec

Example

```
Console#show policy-map interface 1/5 input
Service-policy rd-policy
Console#show policy-map interface
Interface ethernet 1/2
  service-policy input policy-map
Interface ethernet 1/3
  service-policy input policy-map
Interface ethernet 1/4
  service-policy input policy-map
Interface ethernet 1/5
  service-policy input policy-map
Console#
```

22 Multicast Filtering Commands

This switch uses IGMP (Internet Group Management Protocol) to check for any attached hosts that want to receive a specific multicast service. It identifies the ports containing hosts requesting a service and sends data out to those ports only. It then propagates the service request up to any neighboring multicast switch/ router to ensure that it will continue to receive the multicast service.

Table 108: Multicast Filtering Commands

Command Group	Function
IGMP Snooping	Configures multicast groups via IGMP snooping or static assignment, sets the IGMP version, enables proxy reporting, displays current snooping settings, and displays the multicast service and group members
Static Multicast Routing	Configures static multicast router ports which forward all inbound multicast traffic to the attached VLANs
IGMP Filtering and Throttling	Configures IGMP filtering and throttling
MLD Snooping	Configures multicast snooping for IPv6
MLD Filtering and Throttling	Configures MLD filtering and throttling for IPv6.

IGMP Snooping

This section describes commands used to configure IGMP snooping on the switch.

Table 109: IGMP Snooping Commands

Command	Function	Mode
ip igmp snooping	Enables IGMP snooping	GC
ip igmp snooping priority	Assigns a priority to all multicast traffic	GC
ip igmp snooping proxy-reporting	Enables IGMP Snooping with Proxy Reporting	GC
ip igmp snooping querier	Allows this device to act as the querier for IGMP snooping	GC
ip igmp snooping router-alert-option-check	Discards any IGMPv2/v3 packets that do not include the Router Alert option	GC
ip igmp snooping router-port-expire-time	Configures the querier timeout	GC
ip igmp snooping tcn-flood	Floods multicast traffic when a Spanning Tree topology change occurs	GC

Table 109: IGMP Snooping Commands (Continued)

Command	Function	Mode
ip igmp snooping tcn-query-solicit	Sends an IGMP Query Solicitation when a Spanning Tree topology change occurs	GC
ip igmp snooping unregistered-data-flood	Floods unregistered multicast traffic into the attached VLAN	GC
ip igmp snooping unsolicited-report-interval	Specifies how often the upstream interface should transmit unsolicited IGMP reports (when proxy reporting is enabled)	GC
ip igmp snooping version	Configures the IGMP version for snooping	GC
ip igmp snooping version-exclusive	Discards received IGMP messages which use a version different to that currently configured	GC
ip igmp snooping vlan general-query-suppression	Suppresses general queries except for ports attached to downstream multicast hosts	GC
ip igmp snooping vlan immediate-leave	Immediately deletes a member port of a multicast service if a leave packet is received at that port and immediate-leave is enabled for the parent VLAN	GC
ip igmp snooping vlan last-memb-query-count	Configures the number of IGMP proxy query messages that are sent out before the system assumes there are no local members	GC
ip igmp snooping vlan last-memb-query-intvl	Configures the last-member-query interval	GC
ip igmp snooping vlan mrd	Sends multicast router solicitation messages	GC
ip igmp snooping vlan proxy-address	Configures a static address for proxy IGMP query and reporting	GC
ip igmp snooping vlan proxy-reporting	Enables IGMP Snooping with Proxy Reporting	GC
ip igmp snooping vlan query-interval	Configures the interval between sending IGMP general queries	GC
ip igmp snooping vlan query-resp-intvl	Configures the maximum time the system waits for a response to general queries	GC
ip igmp snooping vlan static	Adds an interface as a member of a multicast group	GC
ip igmp snooping vlan version	Configures the IGMP version for snooping	GC
ip igmp snooping vlan version-exclusive	Discards received IGMP messages which use a version different to that currently configured	GC
clear ip igmp snooping groups dynamic	Clears multicast group information dynamically learned through IGMP snooping	PE
clear ip igmp snooping statistics	Clears IGMP snooping statistics	PE
show ip igmp snooping	Shows the IGMP snooping, proxy, and query configuration	PE
show ip igmp snooping group	Shows known multicast group, source, and host port mapping	PE

Table 109: IGMP Snooping Commands (Continued)

Command	Function	Mode
show ip igmp snooping mrouter	Shows multicast router ports	PE
show ip igmp snooping statistics	Shows IGMP snooping protocol statistics for the specified interface	PE

ip igmp snooping

This command enables IGMP snooping globally on the switch or on a selected VLAN interface. Use the **no** form to disable it.

Syntax

[**no**] **ip igmp snooping** [**vlan** *vlan-id*]

vlan-id - VLAN ID (Range: 1-4094)

Default Setting

Disabled

Command Mode

Global Configuration

Command Usage

- When IGMP snooping is enabled globally, the per VLAN interface settings for IGMP snooping take precedence.
- When IGMP snooping is disabled globally, snooping can still be configured per VLAN interface, but the interface settings will not take effect until snooping is re-enabled globally.

Example

The following example enables IGMP snooping globally.

```
Console(config)#ip igmp snooping
Console(config)#
```

ip igmp snooping priority

This command assigns a priority to all multicast traffic. Use the **no** form to restore the default setting.

Syntax

ip igmp snooping priority *priority*

no ip igmp snooping priority

priority - The CoS priority assigned to all multicast traffic. (Range: 0-7, where 7 is the highest priority)

Default Setting

Disabled

Command Mode

Global Configuration

Command Usage

This command can be used to set a high priority for low-latency multicast traffic such as a video-conference, or to set a low priority for normal multicast traffic not sensitive to latency.

Example

```
Console(config)#ip igmp snooping priority 6
Console(config)#
```

Related Commands

show ip igmp snooping (554)

ip igmp snooping proxy-reporting

This command enables IGMP Snooping with Proxy Reporting. Use the **no** form to restore the default setting.

Syntax

[**no**] **ip igmp snooping proxy-reporting**

ip igmp snooping vlan *vlan-id* **proxy-reporting** {**enable** | **disable**}
no ip igmp snooping vlan *vlan-id* **proxy-reporting**

vlan-id - VLAN ID (Range: 1-4094)

enable - Enable on the specified VLAN.

disable - Disable on the specified VLAN.

Default Setting

Global: Disabled
VLAN: Based on global setting

Command Mode
Global Configuration

Command Usage
- When proxy reporting is enabled with this command, the switch performs "IGMP Snooping with Proxy Reporting" (as defined in DSL Forum TR-101, April 2006), including last leave, and query suppression. Last leave sends out a proxy query when the last member leaves a multicast group, and query suppression means that specific queries are not forwarded from an upstream multicast router to hosts downstream from this device.

- If the IGMP proxy reporting is configured on a VLAN, this setting takes precedence over the global configuration.

Example
```
Console(config)#ip igmp snooping proxy-reporting
Console(config)#
```

ip igmp snooping querier

This command enables the switch as an IGMP querier. Use the **no** form to disable it.

Syntax
[**no**] **ip igmp snooping querier**

Default Setting
Disabled

Command Mode
Global Configuration

Command Usage
- IGMP snooping querier is not supported for IGMPv3 snooping (see ip igmp snooping version).

- If enabled, the switch will serve as querier if elected. The querier is responsible for asking hosts if they want to receive multicast traffic.

Example
```
Console(config)#ip igmp snooping querier
Console(config)#
```

ip igmp snooping router-alert-option-check

This command discards any IGMPv2/v3 packets that do not include the Router Alert option. Use the **no** form to ignore the Router Alert Option when receiving IGMP messages.

Syntax

[**no**] **ip igmp snooping router-alert-option-check**

Default Setting

Disabled

Command Mode

Global Configuration

Command Usage

As described in Section 9.1 of RFC 3376 for IGMP Version 3, the Router Alert Option can be used to protect against DOS attacks. One common method of attack is launched by an intruder who takes over the role of querier, and starts overloading multicast hosts by sending a large number of group-and-source-specific queries, each with a large source list and the Maximum Response Time set to a large value.

To protect against this kind of attack, (1) routers should not forward queries. This is easier to accomplish if the query carries the Router Alert option. (2) Also, when the switch is acting in the role of a multicast host (such as when using proxy routing), it should ignore version 2 or 3 queries that do not contain the Router Alert option.

Example

```
Console(config)#ip igmp snooping router-alert-option-check
Console(config)#
```

ip igmp snooping router-port-expire-time

This command configures the querier timeout. Use the **no** form to restore the default.

Syntax

ip igmp snooping router-port-expire-time *seconds*

no ip igmp snooping router-port-expire-time

seconds - The time the switch waits after the previous querier stops before it considers it to have expired. (Range: 1-65535; Recommended Range: 300-500)

Default Setting

300 seconds

Command Mode

Global Configuration

Example

The following shows how to configure the timeout to 400 seconds:

```
Console(config)#ip igmp snooping router-port-expire-time 400
Console(config)#
```

ip igmp snooping tcn-flood

This command enables flooding of multicast traffic if a spanning tree topology change notification (TCN) occurs. Use the **no** form to disable flooding.

Syntax

[**no**] **ip igmp snooping tcn-flood**

Default Setting

Disabled

Command Mode

Global Configuration

Command Usage

- When a spanning tree topology change occurs, the multicast membership information learned by the switch may be out of date. For example, a host linked to one port before the topology change (TC) may be moved to another port after the change. To ensure that multicast data is delivered to all receivers, by default, a switch in a VLAN (with IGMP snooping enabled) that receives a Bridge Protocol Data Unit (BPDU) with the TC bit set (by the root bridge) will enter into "multicast flooding mode" for a period of time until the topology has stabilized and the new locations of all multicast receivers are learned.

- If a topology change notification (TCN) is received, and all the uplink ports are subsequently deleted, a timeout mechanism is used to delete all of the currently learned multicast channels.

- When a new uplink port starts up, the switch sends unsolicited reports for all current learned channels out through the new uplink port.

- By default, the switch immediately enters into "multicast flooding mode" when a spanning tree topology change occurs. In this mode, multicast traffic will be flooded to all VLAN ports. If many ports have subscribed to different multicast groups, flooding may cause excessive loading on the link between the switch and the end host. Flooding may be disabled to avoid this, causing multicast traffic to be delivered only to those ports on which multicast group members have been learned.

- When the spanning tree topology changes, the root bridge sends a proxy query to quickly re-learn the host membership/port relations for multicast channels. The root bridge also sends an unsolicited Multicast Router Discover (MRD) request to quickly locate the multicast routers in this VLAN.

The proxy query and unsolicited MRD request are flooded to all VLAN ports except for the receiving port when the switch receives such packets.

Example

The following example enables TCN flooding.

```
Console(config)#ip igmp snooping tcn-flood
Console(config)#
```

ip igmp snooping tcn-query-solicit

This command instructs the switch to send out an IGMP general query solicitation when a spanning tree topology change notification (TCN) occurs. Use the **no** form to disable this feature.

Syntax

[**no**] **ip igmp snooping tcn-query-solicit**

Default Setting

Disabled

Command Mode

Global Configuration

Command Usage

- When the root bridge in a spanning tree receives a topology change notification for a VLAN where IGMP snooping is enabled, it issues a global IGMP leave message (query solicitation). When a switch receives this solicitation, it floods it to all ports in the VLAN where the spanning tree change occurred. When an upstream multicast router receives this solicitation, it will also immediately issues an IGMP general query.

- The **ip igmp snooping tcn query-solicit** command can be used to send a query solicitation whenever it notices a topology change, even if the switch is not the root bridge in the spanning tree.

Example

The following example instructs the switch to issue an IGMP general query whenever it receives a spanning tree topology change notification.

```
Console(config)#ip igmp snooping tcn query-solicit
Console(config)#
```

ip igmp snooping unregistered-data-flood

This command floods unregistered multicast traffic into the attached VLAN. Use the **no** form to drop unregistered multicast traffic.

Syntax

[**no**] **ip igmp snooping unregistered-data-flood**

Default Setting

Disabled

Command Mode

Global Configuration

Command Usage

Once the table used to store multicast entries for IGMP snooping and multicast routing is filled, no new entries are learned. If no router port is configured in the attached VLAN, and unregistered-flooding is disabled, any subsequent multicast traffic not found in the table is dropped, otherwise it is flooded throughout the VLAN.

Example

```
Console(config)#ip igmp snooping unregistered-data-flood
Console(config)#
```

ip igmp snooping unsolicited-report-interval

This command specifies how often the upstream interface should transmit unsolicited IGMP reports when proxy reporting is enabled. Use the **no** form to restore the default value.

Syntax

ip igmp snooping unsolicited-report-interval *seconds*

no ip igmp snooping unsolicited-report-interval

seconds - The interval at which to issue unsolicited reports. (Range: 1-65535 seconds)

Default Setting

400 seconds

Command Mode

Global Configuration

Command Usage

- When a new upstream interface (that is, uplink port) starts up, the switch sends unsolicited reports for all currently learned multicast channels out through the new upstream interface.
- This command only applies when proxy reporting is enabled (see page 538).

Example

```
Console(config)#ip igmp snooping unsolicited-report-interval 5
Console(config)#
```

ip igmp snooping version

This command configures the IGMP snooping version. Use the **no** form to restore the default.

Syntax

ip igmp snooping [**vlan** *vlan-id*] **version** {**1** | **2** | **3**}

no ip igmp snooping version

vlan-id - VLAN ID (Range: 1-4094)

1 - IGMP Version 1

2 - IGMP Version 2

3 - IGMP Version 3

Default Setting

Global: IGMP Version 2
VLAN: Not configured, based on global setting

Command Mode

Global Configuration

Command Usage

- This command configures the IGMP report/query version used by IGMP snooping. Versions 1 - 3 are all supported, and versions 2 and 3 are backward compatible, so the switch can operate with other devices, regardless of the snooping version employed.

- If the IGMP snooping version is configured on a VLAN, this setting takes precedence over the global configuration.

Example

The following configures the global setting for IGMP snooping to version 1.

```
Console(config)#ip igmp snooping version 1
Console(config)#
```

ip igmp snooping version-exclusive

This command discards any received IGMP messages (except for multicast protocol packets) which use a version different to that currently configured by the ip igmp snooping version command. Use the **no** form to disable this feature.

Syntax

ip igmp snooping [**vlan** *vlan-id*] **version-exclusive**

no ip igmp snooping version-exclusive

vlan-id - VLAN ID (Range: 1-4094)

Default Setting

Global: Disabled
VLAN: Disabled

Command Mode

Global Configuration

Command Usage

- If version exclusive is disabled on a VLAN, then this setting is based on the global setting. If it is enabled on a VLAN, then this setting takes precedence over the global setting.
- When this function is disabled, the currently selected version is backward compatible (see the ip igmp snooping version command.

Example

```
Console(config)#ip igmp snooping version-exclusive
Console(config)#
```

ip igmp snooping vlan general-query-suppression

This command suppresses general queries except for ports attached to downstream multicast hosts. Use the **no** form to flood general queries to all ports except for the multicast router port.

Syntax

[**no**] **ip igmp snooping vlan** *vlan-id* **general-query-suppression**

vlan-id - VLAN ID (Range: 1-4094)

Default Setting

Disabled

Command Mode

Global Configuration

Command Usage

- By default, general query messages are flooded to all ports, except for the multicast router through which they are received.
- If general query suppression is enabled, then these messages are forwarded only to downstream ports which have joined a multicast service.

Example

```
Console(config)#ip igmp snooping vlan 1 general-query-suppression
Console(config)#
```

ip igmp snooping vlan immediate-leave

This command immediately deletes a member port of a multicast service if a leave packet is received at that port and immediate-leave is enabled for the parent VLAN. Use the **no** form to restore the default.

Syntax

ip igmp snooping vlan *vlan-id* **immediate-leave** [**by-host-ip**]

no ip igmp snooping vlan *vlan-id* **immediate-leave**

vlan-id - VLAN ID (Range: 1-4094)

by-host-ip - Specifies that the member port will be deleted only when there are no hosts joining this group.

Default Setting

Disabled

Command Mode

Global Configuration

Command Usage

- If immediate-leave is *not* used, a multicast router (or querier) will send a group-specific query message when an IGMPv2/v3 group leave message is received. The router/querier stops forwarding traffic for that group only if no host replies to the query within the timeout period. (The timeout for this release is defined by Last Member Query Interval (fixed at one second) * Robustness Variable (fixed at 2) as defined in RFC 2236.)
- If immediate-leave is used, the switch assumes that only one host is connected to the interface. Therefore, immediate leave should only be enabled on an interface if it is connected to only one IGMP-enabled device, either a service host or a neighbor running IGMP snooping.
- If the “by-host-ip” option is used, the router/querier will not send out a group-specific query when an IGMPv2/v3 leave message is received. But will check if there are other hosts joining the multicast group. Only when all hosts on that port leave the group will the member port be deleted.

- This command is only effective if IGMP snooping is enabled, and IGMPv2 or IGMPv3 snooping is used.

Example

The following shows how to enable immediate leave.

```
Console(config)#ip igmp snooping vlan 1 immediate-leave
Console(config)#
```

ip igmp snooping vlan last-memb-query-count

This command configures the number of IGMP proxy group-specific or group-and-source-specific query messages that are sent out before the system assumes there are no more local members. Use the **no** form to restore the default.

Syntax

ip igmp snooping vlan *vlan-id* **last-memb-query-count** *count*

no ip igmp snooping vlan *vlan-id* **last-memb-query-count**

vlan-id - VLAN ID (Range: 1-4094)

count - The number of proxy group-specific or group-and-source-specific query messages to issue before assuming that there are no more group members. (Range: 1-255)

Default Setting

2

Command Mode

Global Configuration

Command Usage

This command will take effect only if IGMP snooping proxy reporting or IGMP querier is enabled (page 538).

Example

```
Console(config)#ip igmp snooping vlan 1 last-memb-query-count 7
Console(config)#
```

ip igmp snooping vlan last-memb-query-intvl

This command configures the last-member-query interval. Use the **no** form to restore the default.

Syntax

ip igmp snooping vlan *vlan-id* **last-memb-query-intvl** *interval*

no ip igmp snooping vlan *vlan-id* **last-memb-query-intvl**

vlan-id - VLAN ID (Range: 1-4094)

interval - The interval to wait for a response to a group-specific or group-and-source-specific query message. (Range: 1-31744 tenths of a second)

Default Setting

10 (1 second)

Command Mode

Global Configuration

Command Usage

- When a multicast host leaves a group, it sends an IGMP leave message. When the leave message is received by the switch, it checks to see if this host is the last to leave the group by sending out an IGMP group-specific or group-and-source-specific query message, and starts a timer. If no reports are received before the timer expires, the group record is deleted, and a report is sent to the upstream multicast router.
- A reduced value will result in reduced time to detect the loss of the last member of a group or source, but may generate more bursty traffic.
- This command will take effect only if IGMP snooping proxy reporting is enabled (page 538).

Example

```
Console(config)#ip igmp snooping vlan 1 last-memb-query-intvl 700
Console(config)#
```

ip igmp snooping vlan mrd

This command enables sending of multicast router solicitation messages. Use the **no** form to disable these messages.

Syntax

[**no**] **ip igmp snooping vlan** *vlan-id* **mrd**

vlan-id - VLAN ID (Range: 1-4094)

Default Setting

Disabled

Command Mode
Global Configuration

Command Usage
- Multicast Router Discovery (MRD) uses multicast router advertisement, multicast router solicitation, and multicast router termination messages to discover multicast routers. Devices send solicitation messages in order to solicit advertisement messages from multicast routers. These messages are used to discover multicast routers on a directly attached link. Solicitation messages are also sent whenever a multicast forwarding interface is initialized or re-initialized. Upon receiving a solicitation on an interface with IP multicast forwarding and MRD enabled, a router will respond with an advertisement.

- Advertisements are sent by routers to advertise that IP multicast forwarding is enabled. These messages are sent unsolicited periodically on all router interfaces on which multicast forwarding is enabled. They are sent upon the expiration of a periodic timer, as a part of a router's start up procedure, during the restart of a multicast forwarding interface, and on receipt of a solicitation message. When the multicast services provided to a VLAN is relatively stable, the use of solicitation messages is not required and may be disabled using the **no ip igmp snooping vlan mrd** command.

- This command may also be used to disable multicast router solicitation messages when the upstream router does not support MRD, to reduce the loading on a busy upstream router, or when IGMP snooping is disabled in a VLAN.

Example
This example disables sending of multicast router solicitation messages on VLAN 1.

```
Console(config)#no ip igmp snooping vlan 1 mrd
Console(config)#
```

ip igmp snooping vlan proxy-address

This command configures a static source address for locally generated query and report messages used by IGMP proxy reporting. Use the **no** form to restore the default source address.

Syntax

[**no**] **ip igmp snooping vlan** *vlan-id* **proxy-address** *source-address*

vlan-id - VLAN ID (Range: 1-4094)

source-address - The source address used for proxied IGMP query and report, and leave messages. (Any valid IP unicast address)

Default Setting
0.0.0.0

Command Mode
Global Configuration

Command Usage
IGMP Snooping uses a null IP address of 0.0.0.0 for the source of IGMP query messages which are proxied to downstream hosts to indicate that it is not the elected querier, but is only proxying these messages as defined in RFC 4541. The switch also uses a null address in IGMP reports sent to upstream ports.

Many hosts do not implement RFC 4541, and therefore do not understand query messages with the source address of 0.0.0.0. These hosts will therefore not reply to the queries, causing the multicast router to stop sending traffic to them.

To resolve this problem, the source address in proxied IGMP query and report messages can be replaced with any valid unicast address (other than the router's own address) using this command.

Rules Used for Proxy Reporting

When IGMP Proxy Reporting is disabled, the switch will use a null IP address for the source of IGMP query and report messages unless a proxy query address has been set.

When IGMP Proxy Reporting is enabled, the source address is based on the following criteria:

- If a proxy query address is configured, the switch will use that address as the source IP address in general and group-specific query messages sent to downstream hosts, and in report and leave messages sent upstream from the multicast router port.
- If a proxy query address is not configured, the switch will use the VLAN's IP address as the IP source address in general and group-specific query messages sent downstream, and use the source address of the last IGMP message received from a downstream host in report and leave messages sent upstream from the multicast router port.

Example
The following example sets the source address for proxied IGMP query messages to 10.0.1.8.

```
Console(config)#ip igmp snooping vlan 1 proxy-address 10.0.1.8
Console(config)#
```

ip igmp snooping vlan query-interval

This command configures the interval between sending IGMP general queries. Use the **no** form to restore the default.

Syntax

ip igmp snooping vlan *vlan-id* **query-interval** *interval*

no ip igmp snooping vlan *vlan-id* **query-interval**

vlan-id - VLAN ID (Range: 1-4094)

interval - The interval between sending IGMP general queries. (Range: 2-31744 seconds)

Default Setting

125 seconds

Command Mode

Global Configuration

Command Usage

- An IGMP general query message is sent by the switch at the interval specified by this command. When this message is received by downstream hosts, all receivers build an IGMP report for the multicast groups they have joined.
- This command applies when the switch is serving as the querier (page 539), or as a proxy host when IGMP snooping proxy reporting is enabled (page 538).

Example

```
Console(config)#ip igmp snooping vlan 1 query-interval 150
Console(config)#
```

ip igmp snooping vlan query-resp-intvl

This command configures the maximum time the system waits for a response to general queries. Use the **no** form to restore the default.

Syntax

ip igmp snooping vlan *vlan-id* **query-resp-intvl** *interval*

no ip igmp snooping vlan *vlan-id* **query-resp-intvl**

vlan-id - VLAN ID (Range: 1-4094)

interval - The maximum time the system waits for a response to general queries. (Range: 10-31740 tenths of a second)

Default Setting

100 (10 seconds)

Command Mode

Global Configuration

Command Usage

This command applies when the switch is serving as the querier (page 539), or as a proxy host when IGMP snooping proxy reporting is enabled (page 538).

Example

```
Console(config)#ip igmp snooping vlan 1 query-resp-intvl 20
Console(config)#
```

ip igmp snooping vlan static

This command adds a port to a multicast group. Use the **no** form to remove the port.

Syntax

[**no**] **ip igmp snooping vlan** *vlan-id* **static** *ip-address interface*

vlan-id - VLAN ID (Range: 1-4094)

ip-address - IP address for multicast group

interface

ethernet *unit/port*

unit - Unit identifier. (Range: 1)

port - Port number. (Range: 1-52)

port-channel *channel-id* (Range: 1-8)

Default Setting

None

Command Mode

Global Configuration

Command Usage

- Static multicast entries are never aged out.
- When a multicast entry is assigned to an interface in a specific VLAN, the corresponding traffic can only be forwarded to ports within that VLAN.

Example

The following shows how to statically configure a multicast group on a port.

```
Console(config)#ip igmp snooping vlan 1 static 224.0.0.12 ethernet 1/5
Console(config)#
```

clear ip igmp snooping groups dynamic

This command clears multicast group information dynamically learned through IGMP snooping.

Syntax

clear ip igmp snooping groups dynamic

Command Mode

Privileged Exec

Command Usage

This command only clears entries learned though IGMP snooping. Statically configured multicast address are not cleared.

Example

```
Console#clear ip igmp snooping groups dynamic
Console#
```

clear ip igmp snooping statistics

This command clears IGMP snooping statistics.

Syntax

clear ip igmp snooping statistics [**interface** *interface*]

interface

ethernet *unit/port*

unit - Unit identifier. (Range: 1)

port - Port number. (Range: 1-52)

port-channel *channel-id* (Range: 1-8)

vlan *vlan-id* - VLAN identifier (Range: 1-4094)

Command Mode

Privileged Exec

Example

```
Console#clear ip igmp snooping statistics
Console#
```

show ip igmp snooping

This command shows the IGMP snooping, proxy, and query configuration settings.

Syntax

show ip igmp snooping [**vlan** *vlan-id*]

vlan-id - VLAN ID (1-4094)

Command Mode

Privileged Exec

Command Usage

This command displays global and VLAN-specific IGMP configuration settings.

Example

The following shows the current IGMP snooping configuration:

```
Console#show ip igmp snooping
 IGMP Snooping                        : Enabled
 Router Port Expire Time              : 300 s
 Router Alert Check                   : Disabled
 Router Port Mode                     : Forward
 TCN Flood                            : Disabled
 TCN Query Solicit                    : Disabled
 Unregistered Data Flood              : Disabled
 Unsolicited Report Interval          : 400 s
 Version Exclusive                    : Disabled
 Version                              : 2
 Proxy Reporting                      : Disabled
 Querier                              : Disabled

 VLAN 1:
 --------
 IGMP Snooping                        : Enabled
 IGMP Snooping Running Status         : Inactive
 Version                              : Using global Version (2)
 Version Exclusive                    : Using global status (Disabled)
 Immediate Leave                      : Disabled
 Last Member Query Interval           : 10 (unit: 1/10s)
 Last Member Query Count              : 2
 General Query Suppression            : Disabled
 Query Interval                       : 125
 Query Response Interval              : 100 (unit: 1/10s)
 Proxy Query Address                  : 0.0.0.0
 Proxy Reporting                      : Using global status (Disabled)
 Multicast Router Discovery           : Disabled

 VLAN Static Group    Port
 ---- --------------- --------
 1    224.1.1.1       Eth 1/ 1
⋮
```

show ip igmp snooping group

This command shows known multicast group, source, and host port mappings for the specified VLAN interface, or for all interfaces if none is specified.

Syntax

show ip igmp snooping group [**host-ip-addr** *ip-address interface* | **igmpsnp** | **sort-by-port** | **user** | **vlan** *vlan-id* [**user** | **igmpsnp**]]

ip-address - IP address for multicast group

interface

ethernet *unit/port*

unit - Unit identifier. (Range: 1)

port - Port number. (Range: 1-52)

port-channel *channel-id* (Range: 1-8)

igmpsnp - Display only entries learned through IGMP snooping.

sort-by-port - Display entries sorted by port.

user - Display only the user-configured multicast entries.

vlan-id - VLAN ID (1-4094)

Default Setting

None

Command Mode

Privileged Exec

Command Usage

Member types displayed include IGMP or USER, depending on selected options.

Example

The following shows the multicast entries learned through IGMP snooping for VLAN 1.

```
Console#show ip igmp snooping group vlan 1
Bridge Multicast Forwarding Entry Count:1
Flag: R - Router port, M - Group member port
      H - Host counts (number of hosts join the group on this port).
      P - Port counts (number of ports join the group).
 Up time: Group elapsed time (d:h:m:s).
 Expire : Group remaining time (m:s).

VLAN Group           Port        Up time     Expire Count
---- --------------- ----------- ----------- ------ --------
   1 224.1.1.1                   00:00:00:37            2(P)
                     Eth 1/ 1(R)
                     Eth 1/ 2(M)                          0(H)
Console#
```

show ip igmp snooping mrouter

This command displays information on statically configured and dynamically learned multicast router ports.

Syntax

show ip igmp snooping mrouter [**vlan** *vlan-id*]

vlan-id - VLAN ID (Range: 1-4094)

Default Setting

Displays multicast router ports for all configured VLANs.

Command Mode

Privileged Exec

Command Usage

Multicast router port types displayed include Static or Dynamic.

Example

The following shows the ports in VLAN 1 which are attached to multicast routers.

```
Console#show ip igmp snooping mrouter vlan 1
 VLAN M'cast Router Port Type    Expire
 ---- ------------------ ------- --------
 1    Eth 1/4             Dynamic 0:4:28
 1    Eth 1/10            Static
Console#
```

show ip igmp snooping statistics

This command shows IGMP snooping protocol statistics for the specified interface.

Syntax

show ip igmp snooping statistics
{**input** [**interface** *interface*] |
output [**interface** *interface*] |
query [**vlan** *vlan-id*]}

interface

ethernet *unit/port*

unit - Unit identifier. (Range: 1)

port - Port number. (Range: 1-52)

port-channel *channel-id* (Range: 1-8)

vlan *vlan-id* - VLAN ID (Range: 1-4094)

query - Displays IGMP snooping-related statistics.

Default Setting

None

Command Mode

Privileged Exec

Example

The following shows IGMP protocol statistics input:

```
Console#show ip igmp snooping statistics input interface ethernet 1/1
 Input Statistics:
 Interface Report   Leave    G Query  G(-S)-S Query Drop     Join Succ Group
 --------- -------- -------- -------- ------------- -------- --------- ------
 Eth 1/ 1        23       11        4            10        5        14      5
Console#
```

Table 110: show ip igmp snooping statistics input - display description

Field	Description
Interface	Shows interface.
Report	The number of IGMP membership reports received on this interface.
Leave	The number of leave messages received on this interface.
G Query	The number of general query messages received on this interface.
G(-S)-S Query	The number of group specific or group-and-source specific query messages received on this interface.
Drop	The number of times a report, leave or query was dropped. Packets may be dropped due to invalid format, rate limiting, or packet content not allowed.
Join Succ	The number of times a multicast group was successfully joined.
Group	The number of multicast groups active on this interface.

The following shows IGMP protocol statistics output:

```
Console#show ip igmp snooping statistics output interface ethernet 1/1
 Output Statistics:
 Interface  Report   Leave    G Query  G(-S)-S Query Drop     Group
 ---------- -------- -------- -------- ------------- -------- ------
 Eth 1/ 1        12        0        1             0        0      0
Console#
```

Table 111: show ip igmp snooping statistics output - display description

Field	Description
Interface	Shows interface.
Report	The number of IGMP membership reports sent from this interface.
Leave	The number of leave messages sent from this interface.
G Query	The number of general query messages sent from this interface.

Table 111: show ip igmp snooping statistics output - display description

Field	Description
G(-S)-S Query	The number of group specific or group-and-source specific query messages sent from this interface.
Drop	The number of times a report, leave or query was dropped. Packets may be dropped due to invalid format, rate limiting, or packet content not allowed.
Group	The number of multicast groups active on this interface.

The following shows IGMP query-related statistics for VLAN 1:

```
Console#show ip igmp snooping statistics query vlan 1
 Other Querier              : None
 Other Querier Expire       : 0(m):0(s)
 Other Querier Uptime       : 0(h):0(m):0(s)
 Self Querier               : 192.168.2.12
 Self Querier Expire        : 0(m):0(s)
 Self Querier Uptime        : 0(h):0(m):0(s)
 General Query Received     : 0
 General Query Sent         : 0
 Specific Query Received    : 0
 Specific Query Sent        : 0
 Warn Rate Limit            : 0 sec.
 V1 Warning Count           : 0
 V2 Warning Count           : 0
 V3 Warning Count           : 0
Console#
```

Table 112: show ip igmp snooping statistics vlan query - display description

Field	Description
Other Querier	IP address of remote querier on this interface.
Other Querier Expire	Time after which remote querier is assumed to have expired.
Other Querier Uptime	Time remote querier has been up.
Self Querier	IP address of local querier on this interface.
Self Querier Expire	Time after which local querier is assumed to have expired.
Self Querier Uptime	Time local querier has been up.
General Query Received	The number of general queries received on this interface.
General Query Sent	The number of general queries sent from this interface.
Specific Query Received	The number of specific queries received on this interface.
Specific Query Sent	The number of specific queries sent from this interface.
Warn Rate Limit	The rate at which received query messages of the wrong version type cause the Vx warning count to increment. Note that “0 sec” means that the Vx warning count is incremented for each wrong message version received.
V1 Warning Count	The number of times the query version received (Version 1) does not match the version configured for this interface.

Table 112: show ip igmp snooping statistics vlan query - display description

Field	Description
V2 Warning Count	The number of times the query version received (Version 2) does not match the version configured for this interface.
V3 Warning Count	The number of times the query version received (Version 3) does not match the version configured for this interface.

Static Multicast Routing

This section describes commands used to configure static multicast routing on the switch.

Table 113: Static Multicast Interface Commands

Command	Function	Mode
ip igmp snooping vlan mrouter	Adds a multicast router port	GC
show ip igmp snooping mrouter	Shows multicast router ports	PE

ip igmp snooping vlan mrouter

This command statically configures a (Layer 2) multicast router port on the specified VLAN. Use the **no** form to remove the configuration.

Syntax

[**no**] **ip igmp snooping vlan** *vlan-id* **mrouter** *interface*

vlan-id - VLAN ID (Range: 1-4094)

interface

ethernet *unit/port*

unit - Unit identifier. (Range: 1)

port - Port number. (Range: 1-52)

port-channel *channel-id* (Range: 1-8)

Default Setting

No static multicast router ports are configured.

Command Mode

Global Configuration

Command Usage

- Depending on your network connections, IGMP snooping may not always be able to locate the IGMP querier. Therefore, if the IGMP querier is a known multicast router or switch connected over the network to an interface (port or

trunk) on this switch, that interface can be manually configured to join all the current multicast groups.

- IGMP Snooping must be enabled globally on the switch (using the ip igmp snooping command) before a multicast router port can take effect.

Example

The following shows how to configure port 10 as a multicast router port within VLAN 1.

```
Console(config)#ip igmp snooping vlan 1 mrouter ethernet 1/10
Console(config)#
```

IGMP Filtering and Throttling

In certain switch applications, the administrator may want to control the multicast services that are available to end users. For example, an IP/TV service based on a specific subscription plan. The IGMP filtering feature fulfills this requirement by restricting access to specified multicast services on a switch port, and IGMP throttling limits the number of simultaneous multicast groups a port can join.

Table 114: IGMP Filtering and Throttling Commands

Command	Function	Mode
ip igmp filter	Enables IGMP filtering and throttling on the switch	GC
ip igmp profile	Sets a profile number and enters IGMP filter profile configuration mode	GC
permit, deny	Sets a profile access mode to permit or deny	IPC
range	Specifies one or a range of multicast addresses for a profile	IPC
ip igmp filter	Assigns an IGMP filter profile to an interface	IC
ip igmp max-groups	Specifies an IGMP throttling number for an interface	IC
ip igmp max-groups action	Sets the IGMP throttling action for an interface	IC
ip igmp query-drop	Drops any received IGMP query packets	IC
ip multicast-data-drop	Drops all multicast data packets	IC
show ip igmp filter	Displays the IGMP filtering status	PE
show ip igmp profile	Displays IGMP profiles and settings	PE
show ip igmp query-drop	Shows if the interface is configured to drop IGMP query packets	PE
show ip igmp throttle interface	Displays the IGMP throttling setting for interfaces	PE
show ip multicast-data-drop	Shows if the interface is configured to drop multicast data packets	PE

ip igmp filter (Global Configuration)

This command globally enables IGMP filtering and throttling on the switch. Use the **no** form to disable the feature.

Syntax

[**no**] **ip igmp filter**

Default Setting

Disabled

Command Mode

Global Configuration

Command Usage

- IGMP filtering enables you to assign a profile to a switch port that specifies multicast groups that are permitted or denied on the port. An IGMP filter profile can contain one or more, or a range of multicast addresses; but only one profile can be assigned to a port. When enabled, IGMP join reports received on the port are checked against the filter profile. If a requested multicast group is permitted, the IGMP join report is forwarded as normal. If a requested multicast group is denied, the IGMP join report is dropped.

- IGMP filtering and throttling only applies to dynamically learned multicast groups, it does not apply to statically configured groups.

Example

```
Console(config)#ip igmp filter
Console(config)#
```

ip igmp profile

This command creates an IGMP filter profile number and enters IGMP profile configuration mode. Use the **no** form to delete a profile number.

Syntax

[**no**] **ip igmp profile** *profile-number*

profile-number - An IGMP filter profile number. (Range: 1-4294967295)

Default Setting

Disabled

Command Mode

Global Configuration

Command Usage

A profile defines the multicast groups that a subscriber is permitted or denied to join. The same profile can be applied to many interfaces, but only one profile can

be assigned to one interface. Each profile has only one access mode; either permit or deny.

Example

```
Console(config)#ip igmp profile 19
Console(config-igmp-profile)#
```

permit, deny

This command sets the access mode for an IGMP filter profile. Use the **no** form to delete a profile number.

Syntax

{**permit** | **deny**}

Default Setting

Deny

Command Mode

IGMP Profile Configuration

Command Usage

- Each profile has only one access mode; either permit or deny.
- When the access mode is set to permit, IGMP join reports are processed when a multicast group falls within the controlled range. When the access mode is set to deny, IGMP join reports are only processed when a multicast group is not in the controlled range.

Example

```
Console(config)#ip igmp profile 19
Console(config-igmp-profile)#permit
Console(config-igmp-profile)#
```

range

This command specifies multicast group addresses for a profile. Use the **no** form to delete addresses from a profile.

Syntax

[**no**] **range** *low-ip-address* [*high-ip-address*]

low-ip-address - A valid IP address of a multicast group or start of a group range.

high-ip-address - A valid IP address for the end of a multicast group range.

Default Setting

None

Command Mode
IGMP Profile Configuration

Command Usage
Enter this command multiple times to specify more than one multicast address or address range for a profile.

Example

```
Console(config)#ip igmp profile 19
Console(config-igmp-profile)#range 239.1.1.1
Console(config-igmp-profile)#range 239.2.3.1 239.2.3.100
Console(config-igmp-profile)#
```

ip igmp filter (Interface Configuration)

This command assigns an IGMP filtering profile to an interface on the switch. Use the **no** form to remove a profile from an interface.

Syntax

[**no**] **ip igmp filter** *profile-number*

profile-number - An IGMP filter profile number. (Range: 1-4294967295)

Default Setting
None

Command Mode
Interface Configuration

Command Usage
- The IGMP filtering profile must first be created with the ip igmp profile command before being able to assign it to an interface.
- Only one profile can be assigned to an interface.
- A profile can also be assigned to a trunk interface. When ports are configured as trunk members, the trunk uses the filtering profile assigned to the first port member in the trunk.

Example

```
Console(config)#interface ethernet 1/1
Console(config-if)#ip igmp filter 19
Console(config-if)#
```

ip igmp max-groups

This command sets the IGMP throttling number for an interface on the switch. Use the **no** form to restore the default setting.

Syntax

ip igmp max-groups *number*

no ip igmp max-groups

number - The maximum number of multicast groups an interface can join at the same time. (Range: 1-1024)

Default Setting

1024

Command Mode

Interface Configuration (Ethernet, Port Channel)

Command Usage

- IGMP throttling sets a maximum number of multicast groups that a port can join at the same time. When the maximum number of groups is reached on a port, the switch can take one of two actions; either "deny" or "replace" (see the ip igmp max-groups action command). If the action is set to deny, any new IGMP join reports will be dropped. If the action is set to replace, the switch randomly removes an existing group and replaces it with the new multicast group.

- IGMP throttling can also be set on a trunk interface. When ports are configured as trunk members, the trunk uses the throttling settings of the first port member in the trunk.

Example

```
Console(config)#interface ethernet 1/1
Console(config-if)#ip igmp max-groups 10
Console(config-if)#
```

ip igmp max-groups action

This command sets the IGMP throttling action for an interface on the switch.

Syntax

ip igmp max-groups action {**deny** | **replace**}

deny - The new multicast group join report is dropped.

replace - The new multicast group replaces an existing group.

Default Setting

Deny

Command Mode
Interface Configuration (Ethernet, Port Channel)

Command Usage
When the maximum number of groups is reached on a port, the switch can take one of two actions; either "deny" or "replace." If the action is set to deny, any new IGMP join reports will be dropped. If the action is set to replace, the switch randomly removes an existing group and replaces it with the new multicast group.

Example

```
Console(config)#interface ethernet 1/1
Console(config-if)#ip igmp max-groups action replace
Console(config-if)#
```

ip igmp query-drop

This command drops any received IGMP query packets. Use the no form to restore the default setting.

Syntax

[**no**] **ip igmp query-drop**

Default Setting
Disabled

Command Mode
Interface Configuration (Ethernet, Port Channel)

Command Usage
This command can be used to drop any query packets received on the specified interface. If this switch is acting as a Querier, this prevents it from being affected by messages received from another Querier.

Example

```
Console(config)#interface ethernet 1/1
Console(config-if)#ip igmp query-drop
Console(config-if)#
```

ip multicast-data-drop

This command drops all multicast data packets. Use the **no** form to disable this feature.

Syntax

[**no**] **ip multicast-data-drop**

Default Setting
Disabled

Command Mode
Interface Configuration (Ethernet, Port Channel)

Command Usage
This command can be used to stop multicast services from being forwarded to users attached to the downstream port (i.e., the interfaces specified by this command).

Example

```
Console(config)#interface ethernet 1/1
Console(config-if)#ip multicast-data-drop
Console(config-if)#
```

show ip igmp filter

This command displays the global and interface settings for IGMP filtering.

Syntax

show ip igmp filter [**interface** *interface*]

interface

ethernet *unit/port*

unit - Unit identifier. (Range: 1)

port - Port number. (Range: 1-52)

port-channel *channel-id* (Range: 1-8)

Default Setting
None

Command Mode
Privileged Exec

Example

```
Console#show ip igmp filter
IGMP Filter enabled
Console#show ip igmp filter interface ethernet 1/1
Ethernet 1/1 information
--------------------------------
 IGMP Profile 19
  Deny
  Range 239.1.1.1 239.1.1.1
  Range 239.2.3.1 239.2.3.100
Console#
```

show ip igmp profile

This command displays IGMP filtering profiles created on the switch.

Syntax

show ip igmp profile [*profile-number*]

profile-number - An existing IGMP filter profile number. (Range: 1-4294967295)

Default Setting

None

Command Mode

Privileged Exec

Example

```
Console#show ip igmp profile
IGMP Profile 19
IGMP Profile 50
Console#show ip igmp profile 19
IGMP Profile 19
  Deny
  Range 239.1.1.1 239.1.1.1
  Range 239.2.3.1 239.2.3.100
Console#
```

show ip igmp query-drop

This command shows if the specified interface is configured to drop IGMP query packets.

Syntax

show ip igmp throttle interface [*interface*]

interface

ethernet *unit/port*

unit - Unit identifier. (Range: 1)

port - Port number. (Range: 1-52)

port-channel *channel-id* (Range: 1-8)

Default Setting

None

Command Mode

Privileged Exec

Command Usage

Using this command without specifying an interface displays all interfaces.

Example

```
Console#show ip igmp query-drop interface ethernet 1/1
Ethernet 1/1: Enabled
Console#
```

show ip igmp throttle interface

This command displays the interface settings for IGMP throttling.

Syntax

show ip igmp throttle interface [*interface*]

interface

ethernet *unit/port*

unit - Unit identifier. (Range: 1)

port - Port number. (Range: 1-52)

port-channel *channel-id* (Range: 1-8)

Default Setting

None

Command Mode

Privileged Exec

Command Usage

Using this command without specifying an interface displays information for all interfaces.

Example

```
Console#show ip igmp throttle interface ethernet 1/1
Eth  1/1 Information
                   Status : FALSE
                   Action : Deny
     Max Multicast Groups : 1024
 Current Multicast Groups : 0

Console#
```

show ip multicast-data-drop

This command shows if the specified interface is configured to drop multicast data packets.

Syntax

show ip igmp throttle interface [*interface*]

interface

ethernet *unit/port*

unit - Unit identifier. (Range: 1)

port - Port number. (Range: 1-52)

port-channel *channel-id* (Range: 1-8)

Default Setting

None

Command Mode

Privileged Exec

Command Usage

Using this command without specifying an interface displays all interfaces.

Example

```
Console#show ip multicast-data-drop interface ethernet 1/1
Ethernet 1/1: Enabled
Console#
```

MLD Snooping

Multicast Listener Discovery (MLD) snooping operates on IPv6 traffic and performs a similar function to IGMP snooping for IPv4. That is, MLD snooping dynamically configures switch ports to limit IPv6 multicast traffic so that it is forwarded only to ports with users that want to receive it. This reduces the flooding of IPv6 multicast packets in the specified VLANs.

There are two versions of the MLD protocol, version 1 and version 2. MLDv1 control packets include Listener Query, Listener Report, and Listener Done messages (equivalent to IGMPv2 query, report, and leave messages). MLDv2 control packets include MLDv2 query and report messages, as well as MLDv1 report and done messages.

Remember that IGMP Snooping and MLD Snooping are independent functions, and can therefore both function at the same time.

Table 115: MLD Snooping Commands

Command	Function	Mode
ipv6 mld snooping	Enables MLD Snooping globally	GC
ipv6 mld snooping proxy-reporting	Enables MLD Snooping with Proxy Reporting	GC
ipv6 mld snooping querier	Allows the switch to act as the querier for MLD snooping	GC
ipv6 mld snooping query-interval	Configures the interval between sending MLD general query messages	GC
ipv6 mld snooping query-max-response-time	Configures the maximum response time for a general queries	GC
ipv6 mld snooping robustness	Configures the robustness variable	GC
ipv6 mld snooping router-port-expire-time	Configures the router port expire time	GC
ipv6 mld snooping unknown-multicast mode	Sets an action for unknown multicast packets	GC
ipv6 mld snooping unsolicited-report-interval	Specifies how often the upstream interface should transmit unsolicited IGMP reports (when proxy reporting is enabled)	GC
ipv6 mld snooping version	Configures the MLD Snooping version	GC
ipv6 mld snooping vlan immediate-leave	Removes a member port of an IPv6 multicast service if a leave packet is received at that port and MLD immediate-leave is enabled for the parent VLAN	GC
ipv6 mld snooping vlan mrouter	Adds an IPv6 multicast router port	GC
ipv6 mld snooping vlan static	Adds an interface as a member of a multicast group	GC
clear ipv6 mld snooping groups dynamic	Clears multicast group information dynamically learned through MLD snooping	PE
clear ipv6 mld snooping statistics	Clears MLD snooping statistics	PE
show ipv6 mld snooping	Displays MLD Snooping configuration	PE
show ipv6 mld snooping group	Displays the learned groups	PE
show ipv6 mld snooping group source-list	Displays the learned groups and corresponding source list	PE
show ipv6 mld snooping mrouter	Displays the information of multicast router ports	PE
show ipv6 mld snooping statistics	Shows IGMP snooping protocol statistics for the specified interface	PE

ipv6 mld snooping

This command enables MLD Snooping globally on the switch. Use the **no** form to disable MLD Snooping.

Syntax

[**no**] **ipv6 mld snooping**

Default Setting

Disabled

Command Mode

Global Configuration

Example

The following example enables MLD Snooping:

```
Console(config)#ipv6 mld snooping
Console(config)#
```

ipv6 mld snooping proxy-reporting

This command enables IGMP Snooping with Proxy Reporting. Use the **no** form to restore the default setting.

Syntax

[**no**] **ipv6 mld snooping proxy-reporting**

Default Setting

Disabled

Command Mode

Global Configuration

Command Usage

- When proxy reporting is enabled with this command, reports received from downstream hosts are summarized and used to build internal membership states. Proxy-reporting devices may use the all-zeros IP source address when forwarding any summarized reports upstream. For this reason, IGMP membership reports received by the snooping switch must not be rejected because the source IP address is set to 0.0.0.0.

Example

```
Console(config)#ipv6 mld snooping proxy-reporting
Console(config)#
```

ipv6 mld snooping querier

This command allows the switch to act as the querier for MLDv2 snooping. Use the no form to disable this feature.

Syntax

[**no**] **ipv6 mld snooping querier**

Default Setting

Disabled

Command Mode

Global Configuration

Command Usage

- If enabled, the switch will serve as querier if elected. The querier is responsible for asking hosts if they want to receive multicast traffic.
- An IPv6 address must be configured on the VLAN interface from which the querier will act if elected. When serving as the querier, the switch uses its own IPv6 address as the query source address.
- The querier will not start or will disable itself after having started if it detects an IPv6 multicast router on the network.

Example

```
Console(config)#ipv6 mld snooping querier
Console(config)#
```

ipv6 mld snooping query-interval

This command configures the interval between sending MLD general queries. Use the **no** form to restore the default.

Syntax

ipv6 mld snooping query-interval *interval*

no ipv6 mld snooping query-interval

interval - The interval between sending MLD general queries. (Range: 60-125 seconds)

Default Setting

125 seconds

Command Mode

Global Configuration

Command Usage

- This command applies when the switch is serving as the querier.

- An MLD general query message is sent by the switch at the interval specified by this command. When this message is received by downstream hosts, all receivers build an MLD report for the multicast groups they have joined.

Example

```
Console(config)#ipv6 mld snooping query-interval 150
Console(config)#
```

ipv6 mld snooping query-max-response-time

This command configures the maximum response time advertised in MLD general queries. Use the **no** form to restore the default.

Syntax

ipv6 mld snooping query-max-response-time *seconds*

no ipv6 mld snooping query-max-response-time

seconds - The maximum response time allowed for MLD general queries. (Range: 5-25 seconds)

Default Setting

10 seconds

Command Mode

Global Configuration

Command Usage

This command controls how long the host has to respond to an MLD Query message before the switch deletes the group if it is the last member.

Example

```
Console(config)#ipv6 mld snooping query-max-response-time seconds 15
Console(config)#
```

ipv6 mld snooping robustness

This command configures the MLD Snooping robustness variable. Use the **no** form to restore the default value.

Syntax

ipv6 mld snooping robustness *value*

no ipv6 mld snooping robustness

value - The number of the robustness variable. (Range: 2-10)

Default Setting

2

Command Mode
Global Configuration

Command Usage
A port will be removed from the receiver list for a multicast service when no MLD reports are detected in response to a number of MLD queries. The robustness variable sets the number of queries on ports for which there is no report.

Example

```
Console(config)#ipv6 mld snooping robustness 2
Console(config)#
```

ipv6 mld snooping router-port-expire-time

This command configures the MLD query timeout. Use the **no** form to restore the default.

Syntax

ipv6 mld snooping router-port-expire-time *time*

no ipv6 mld snooping router-port-expire-time

time - Specifies the timeout of a dynamically learned router port. (Range: 300-500 seconds)

Default Setting
300 seconds

Command Mode
Global Configuration

Command Usage
The router port expire time is the time the switch waits after the previous querier stops before it considers the router port (i.e., the interface that had been receiving query packets) to have expired.

Example

```
Console(config)#ipv6 mld snooping router-port-expire-time 300
Console(config)#
```

ipv6 mld snooping unknown-multicast mode

This command sets the action for dealing with unknown multicast packets. Use the **no** form to restore the default.

Syntax

ipv6 mld snooping unknown-multicast mode {**flood** | **to-router-port**}

no ipv6 mld snooping unknown-multicast mode

flood - Floods the unknown multicast data packets to all ports.

to-router-port - Forwards the unknown multicast data packets to router ports.

Default Setting

to-router-port

Command Mode

Global Configuration

Command Usage

- When set to "flood," any received IPv6 multicast packets that have not been requested by a host are flooded to all ports in the VLAN.
- When set to "router-port," any received IPv6 multicast packets that have not been requested by a host are forwarded to ports that are connected to a detected multicast router.

Example

```
Console(config)#ipv6 mld snooping unknown-multicast mode flood
Console(config)#
```

ipv6 mld snooping unsolicited-report-interval

This command specifies how often the upstream interface should transmit unsolicited IGMP reports when proxy reporting is enabled. Use the **no** form to restore the default value.

Syntax

ipv6 mld snooping unsolicited-report-interval *seconds*

no ipv6 mld snooping unsolicited-report-interval

seconds - The interval at which to issue unsolicited reports. (Range: 1-65535 seconds)

Default Setting

400 seconds

Command Mode

Global Configuration

Command Usage

- When a new upstream interface (that is, uplink port) starts up, the switch sends unsolicited reports for all currently learned multicast channels out through the new upstream interface.
- This command only applies when proxy reporting is enabled (see page 571).

Example

```
Console(config)#ipv6 mld snooping unsolicited-report-interval 5
Console(config)#
```

ipv6 mld snooping version

This command configures the MLD snooping version. Use the **no** form to restore the default.

Syntax

ipv6 mld snooping version {**1** | **2**}

1 - MLD version 1.

2 - MLD version 2.

Default Setting

Version 2

Command Mode

Global Configuration

Example

```
Console(config)#ipv6 mld snooping version 1
Console(config)#
```

ipv6 mld snooping vlan immediate-leave

This command immediately deletes a member port of an IPv6 multicast service when a leave packet is received at that port and immediate-leave is enabled for the parent VLAN. Use the **no** form to restore the default.

Syntax

[**no**] **ipv6 mld snooping vlan** *vlan-id* **immediate-leave**

vlan-id - A VLAN identification number. (Range: 1-4094)

Default Setting

Disabled

Command Mode

Global Configuration

Command Usage

- If MLD immediate-leave is *not* used, a multicast router (or querier) will send a group-specific query message when an MLD group leave message is received. The router/querier stops forwarding traffic for that group only if no host replies to the query within the specified timeout period.

- If MLD immediate-leave is enabled, the switch assumes that only one host is connected to the interface. Therefore, immediate leave should only be enabled on an interface if it is connected to only one MLD-enabled device, either a service host or a neighbor running MLD snooping.

Example

The following shows how to enable MLD immediate leave.

```
Console(config)#ipv6 mld snooping immediate-leave
Console(config)#
```

ipv6 mld snooping vlan mrouter

This command statically configures an IPv6 multicast router port. Use the **no** form to remove the configuration.

Syntax

[**no**] **ipv6 mld snooping vlan** *vlan-id* **mrouter** *interface*

vlan-id - VLAN ID (Range: 1-4094)

interface

ethernet *unit/port*

unit - Unit identifier. (Range: 1)

port - Port number. (Range: 1-52)

port-channel *channel-id* (Range: 1-8)

Default Setting

No static multicast router ports are configured.

Command Mode

Global Configuration

Command Usage

Depending on your network connections, MLD snooping may not always be able to locate the MLD querier. Therefore, if the MLD querier is a known multicast router/switch connected over the network to an interface (port or trunk) on the switch, you can manually configure that interface to join all the current multicast groups.

Example

The following shows how to configure port 1 as a multicast router port within VLAN 1:

```
Console(config)#ipv6 mld snooping vlan 1 mrouter ethernet 1/1
Console(config)#
```

ipv6 mld snooping vlan static

This command adds a port to an IPv6 multicast group. Use the **no** form to remove the port.

Syntax

[**no**] **ipv6 mld snooping vlan** *vlan-id* **static** *ipv6-address interface*

vlan - VLAN ID (Range: 1-4094)

ipv6-address - An IPv6 address of a multicast group. (Format: X:X:X:X::X)

interface

ethernet *unit/port*

unit - Unit identifier. (Range: 1)

port - Port number. (Range: 1-52)

port-channel *channel-id* (Range: 1-8)

Default Setting

None

Command Mode

Global Configuration

Example

```
Console(config)#ipv6 mld snooping vlan 1 static ff05:0:1:2:3:4:5:6 ethernet
  1/6
Console(config)#
```

clear ipv6 mld snooping groups dynamic

This command clears multicast group information dynamically learned through MLD snooping.

Syntax

clear ipv6 mld snooping groups dynamic

Command Mode

Privileged Exec

Command Usage

This command only clears entries learned though MLD snooping. Statically configured multicast address are not cleared.

Example

```
Console#clear ipv6 mld snooping groups dynamic
Console#
```

clear ipv6 mld snooping statistics

This command clears MLD snooping statistics.

Syntax

clear ipv6 mld snooping statistics [**interface** *interface*]

interface

ethernet *unit/port*

unit - Unit identifier. (Range: 1)

port - Port number. (Range: 1-52)

port-channel *channel-id* (Range: 1-8)

vlan *vlan-id* - VLAN identifier (Range: 1-4094)

Command Mode

Privileged Exec

Example

```
Console#clear ipv6 mld snooping statistics
Console#
```

show ipv6 mld snooping

This command shows the current MLD Snooping configuration.

Syntax

show ipv6 mld snooping [**vlan** [*vlan-id]*]

vlan-id - VLAN ID (1-4094)

Command Mode

Privileged Exec

Command Usage

This command displays global and VLAN-specific MLD snooping configuration settings.

Example

The following shows MLD Snooping configuration information

```
Console#show ipv6 mld snooping
 Service Status              : Disabled
 Proxy Reporting             : Disabled
 Querier Status              : Disabled
 Robustness                  : 2
 Query Interval              : 125 sec
 Query Max Response Time     : 10 sec
 Router Port Expiry Time     : 300 sec
 Unsolicit Report Interval   : 400 sec
 Immediate Leave             : Disabled on all VLAN
 Immediate Leave By Host     : Disabled on all VLAN
 Unknown Flood Behavior      : To Router Port
 MLD Snooping Version        : Version 2

VLAN Group IPv6 Address                      Port
---- ---------------------------------------- ---------
   1                      ff05:0:1:2:3:4:5:6 Eth 1/1

Console#show ipv6 mld snooping vlan
VLAN 1
 Immediate Leave        : Disabled
 Unknown Flood Behavior : To Router Port
Console#
```

show ipv6 mld snooping group

This command shows known multicast groups, member ports, and the means by which each group was learned.

Syntax

show ipv6 mld snooping group

Command Mode

Privileged Exec

Example

The following shows MLD Snooping group configuration information:

```
Console#show ipv6 mld snooping group

Total Entries 3, limit 255

VLAN Multicast IPv6 Address                  Member Port Type
---- ---------------------------------------- ----------- ---------------
   1                      FF02::01:01:01:01 Eth 1/1     MLD Snooping
   1                      FF02::01:01:01:02 Eth 1/1     Multicast Data
   1                      FF02::01:01:01:02 Eth 1/1     User

Console#
```

show ipv6 mld snooping group source-list

This command shows known multicast groups, member ports, the means by which each group was learned, and the corresponding source list.

Syntax

show ipv6 mld snooping group source-list [*ipv6-address* | **vlan** *vlan-id*]

ipv6-address - An IPv6 address of a multicast group. (Format: X:X:X:X::X)

vlan-id - VLAN ID (1-4094)

Command Mode

Privileged Exec

Example

The following shows MLD Snooping group mapping information:

```
Console#show ipv6 mld snooping group source-list

VLAN ID                      : 1
Mutlicast IPv6 Address       : FF02::01:01:01:01
Member Port                  : Eth 1/1
MLD Snooping                 : Multicast Data
Filter Mode                  : Include
(if exclude filter mode)
Filter Timer Elapse          : 10 sec.
Request List                 : ::01:02:03:04, ::01:02:03:05, ::01:02:03:06,
                               ::01:02:03:07
Exclude List                 : ::02:02:03:04, ::02:02:03:05, ::02:02:03:06,
                               ::02:02:03:07
(if include filter mode)
Include List                 : ::02:02:03:04, ::02:02:03:05, ::02:02:03:06,
                               ::02:02:03:06

Option:
 Filter Mode: Include, Exclude

Console#
```

show ipv6 mld snooping mrouter

This command shows MLD Snooping multicast router information.

Syntax

show ipv6 mld snooping mrouter vlan *vlan-id*

vlan-id - A VLAN identification number. (Range: 1-4094)

Command Mode

Privileged Exec

Example

```
Console#show ipv6 mld snooping mrouter vlan 1
 VLAN Multicast Router Port Type      Expire
 ---- --------------------- --------- ------
    1 Eth 1/ 2              Static
Console#
```

show ipv6 mld snooping statistics

This command shows MLD snooping protocol statistics for the specified interface.

Syntax

show ipv6 mld snooping statistics
{**input** [**interface** *interface*] |
output [**interface** *interface*] |
query [**vlan** *vlan-id*] |
summary interface *interface*}

interface

ethernet *unit/port*

unit - Unit identifier. (Range: 1)

port - Port number. (Range: 1-52)

port-channel *channel-id* (Range: 1-8)

vlan *vlan-id* - VLAN ID (Range: 1-4094)

query - Displays MLD snooping query-related statistics.

Default Setting

None

Command Mode

Privileged Exec

Example

The following shows MLD snooping input-related message statistics:

```
Console#show ipv6 mld snooping statistics input interface ethernet 1/1
 Input Statistics:
 Interface Report   Leave    G Query  G(-S)-S Query Drop     Join Succ Group
 --------- -------- -------- -------- ------------- -------- --------- ------
 Eth 1/ 1         4        0        0             0        0         0      2
Console#
```

Table 116: show ipv6 MLD snooping statistics input - display description

Field	Description
Interface	The unit/port or VLAN interface.
Report	The number of MLD membership reports received on this interface.

Table 116: show ipv6 MLD snooping statistics input - display description

Field	Description
Leave	The number of leave messages received on this interface.
G Query	The number of general query messages received on this interface.
G(-S)-S Query	The number of group specific or group-and-source specific query messages received on this interface.
Drop	The number of times a report, leave or query was dropped. Packets may be dropped due to invalid format, rate limiting, packet content not allowed, or MLD group report received.
Join Succ	The number of times a multicast group was successfully joined.
Group	The number of MLD groups active on this interface.

The following shows MLD snooping output-related message statistics:

```
Console#show ipv6 mld snooping statistics output interface ethernet 1/1
 Output Statistics:
 Interface Report   Leave    G Query  G(-S)-S Query Drop     Group
 --------- -------- -------- -------- ------------- -------- ------
 Eth 1/ 1         0        0        5             0        0      2

Console#
```

Table 117: show ipv6 MLD snooping statistics output - display description

Field	Description
Interface	The unit/port or VLAN interface.
Report	The number of MLD membership reports transmitted from this interface.
Leave	The number of leave messages transmitted from this interface.
G Query	The number of general query messages transmitted from this interface.
G(-S)-S Query	The number of group specific or group-and-source specific query messages transmitted from this interface.
Drop	The number of times a report, leave or query was dropped. Packets may be dropped due to invalid format, rate limiting, packet content not allowed, or MLD group report received.
Join Succ	The number of times a multicast group was successfully joined.
Group	The number of MLD groups active on this interface.

The following shows MLD snooping query-related message statistics:

```
Console#show ipv6 mld snooping statistics query vlan 1
 Other Querier Address     : None
 Other Querier Expire      : 0(m):0(s)
 Other Querier Uptime      : 0(h):0(m):0(s)
 Self Querier Address      : ::
 Self Querier Expire Time  : 1(m):49(s)
 Self Querier UpTime       : 0(h):9(m):6(s)
 General Query Received    : 0
 General Query Sent        : 6
```

```
 Specific Query Received   : 0
 Specific Query Sent       : 0
Console#
```

Table 118: show ipv6 MLD snooping statistics query - display description

Field	Description
Other Querier Address	IP address of remote querier on this interface.
Other Querier Expire	Time after which remote querier is assumed to have expired.
Other Querier Uptime	Time remote querier has been up.
Self Querier	IP address of local querier on this interface.
Self Querier Expire	Time after which local querier is assumed to have expired.
Self Querier Uptime	Time local querier has been up.
General Query Received	The number of general queries received on this interface.
General Query Sent	The number of general queries sent from this interface.
Specific Query Received	The number of group specific queries received on this interface.
Specific Query Sent	The number of group specific queries sent from this interface.

The following shows MLD snooping summary statistics:

```
Console#show ipv6 mld snooping statistics summary interface e 1/1
Number of Groups:  1
 Querier:        :                      Report & Leave:   :
  Transmit       :                       Transmit         :
   General       : 6                      Report          : 0
   Group Specific: 0                      Leave           : 0
  Recieved       :                       Recieved         :
   General       : 0                      Report          : 4
   Group Specific: 0                      Leave           : 0
                                          join Success    : 0
                                          Filter Drop     : 0
                                          Source Port Drop: 0
                                          Others Drop     : 0
Console#show ipv6 mld snooping statistics summary interface vlan 1
Number of Groups:  1
 Querier:        :                      Report & Leave:   :
  Other Querier  : None
                                          Host Addr        : None
  Other Uptime   : 0(h):0(m):0(s)         Unsolicit Expire : 0 sec
  Other Expire   : 0(m):0(s)
  Self Addr      : None
  Self Expire    :  2(m): 3(s)
  Self Uptime    : 0(h):10(m):58(s)
  Transmit       :                       Transmit         :
   General       : 7                      Report          : 0
   Group Specific: 0                      Leave           : 0
  Recieved       :                       Recieved         :
   General       : 0                      Report          : 4
   Group Specific: 0                      Leave           : 0
                                          join Success    : 0
                                          Filter Drop     : 0
                                          Source Port Drop: 0
```

```
                                        Others Drop      : 0
Console#
```

Table 119: show ipv6 MLD snooping statistics summary - display description

Field	Description
Number of Groups	Number of active MLD groups active on the specified interface.
Physical Interface (Port/Trunk)	
Querier:	
Transmit	
General	The number of general queries sent from this interface.
Group Specific	The number of group specific queries sent from this interface.
Recieved	
General	The number of general queries received on this interface.
Group Specific	The number of group specific queries received on this interface.
Report & Leave	
Transmit	
Report	The number of MLD membership reports sent from this interface.
Leave	The number of leave messages sent from this interface.
Recieved	
Report	The number of MLD membership reports received on this interface.
Leave	The number of leave messages received on this interface.
join Success	The number of times a multicast group was successfully joined.
Filter Drop	The number of messages dropped by an MLD filtering profile.
Source Port Drop	The number of dropped messages that are received on MVR source port or mrouter port.
Others Drop	The number of received invalid messages.
Logical Interface (VLAN)	The following additional parameters are included for a VLAN interface
Querier:	
Other Querier	IPv6 address of remote querier on this interface.
Other Uptime	Time remote querier has been up.
Other Expire	Time after which remote querier is assumed to have expired.
Self Addr	IPv6 address of local querier on this interface.
Self Expire	Time after which local querier is assumed to have expired.
Self Uptime	Time local querier has been up.
Report & Leave	
Host Addr	The link-local or global IPv6 address that is assigned on that VLAN.
Unsolicit Expire	The number of group leaves resulting from timeouts instead of explicit leave messages.

MLD Filtering and Throttling

In certain switch applications, the administrator may want to control the multicast services that are available to end users. For example, an IP/TV service based on a specific subscription plan. The MLD filtering feature fulfills this requirement by restricting access to specified multicast services on a switch port, and MLD throttling limits the number of simultaneous multicast groups a port can join.

Table 120: MLD Filtering and Throttling Commands

Command	Function	Mode
ipv6 mld filter	Enables MLD filtering and throttling on the switch	GC
ipv6 mld profile	Sets a profile number and enters MLD filter profile configuration mode	GC
permit, deny	Sets a profile access mode to permit or deny	IPC
range	Specifies one or a range of multicast addresses for a profile	IPC
ipv6 mld filter	Assigns an MLD filter profile to an interface	IC
ipv6 mld max-groups	Specifies an M:D throttling number for an interface	IC
ipv6 mld max-groups action	Sets the MLD throttling action for an interface	IC
ipv6 mld query-drop	Drops any received MLD query packets	IC
show ipv6 mld filter	Displays the MLD filtering status	PE
show ipv6 mld profile	Displays MLD profiles and settings	PE
show ipv6 mld query-drop	Shows if the interface is configured to drop MLD query packets	PE
show ipv6 mld throttle interface	Displays the MLD throttling setting for interfaces	PE

ipv6 mld filter (Global Configuration)

This command globally enables MLD filtering and throttling on the switch. Use the **no** form to disable the feature.

Syntax

[**no**] **ipv6 mld filter**

Default Setting

Disabled

Command Mode

Global Configuration

Command Usage

- MLD filtering enables you to assign a profile to a switch port that specifies multicast groups that are permitted or denied on the port. An MLD filter profile can contain one or more, or a range of multicast addresses; but only one profile

can be assigned to a port. When enabled, MLD join reports received on the port are checked against the filter profile. If a requested multicast group is permitted, the MLD join report is forwarded as normal. If a requested multicast group is denied, the MLD join report is dropped.

- MLD filtering and throttling only applies to dynamically learned multicast groups, it does not apply to statically configured groups.
- The MLD filtering feature operates in the same manner when MVR6 is used to forward multicast traffic.

Example

```
Console(config)#ipv6 mld filter
Console(config)#
```

Related Commands

show ipv6 mld filter

ipv6 mld profile

This command creates an MLD filter profile number and enters MLD profile configuration mode. Use the **no** form to delete a profile number.

Syntax

[**no**] **ipv6 mld profile** *profile-number*

profile-number - An MLD filter profile number. (Range: 1-4294967295)

Default Setting

Disabled

Command Mode

Global Configuration

Command Usage

A profile defines the multicast groups that a subscriber is permitted or denied to join. The same profile can be applied to many interfaces, but only one profile can be assigned to one interface. Each profile has only one access mode; either permit or deny.

Example

```
Console(config)#ipv6 mld profile 19
Console(config-mld-profile)#
```

Related Commands

show ipv6 mld profile

permit, deny

This command sets the access mode for an MLD filter profile. Use the **no** form to delete a profile number.

Syntax

{**permit** | **deny**}

Default Setting

deny

Command Mode

MLD Profile Configuration

Command Usage

- Each profile has only one access mode; either permit or deny.
- When the access mode is set to permit, MLD join reports are processed when a multicast group falls within the controlled range. When the access mode is set to deny, MLD join reports are only processed when a multicast group is not in the controlled range.

Example

```
Console(config)#ipv6 mld profile 19
Console(config-mld-profile)#permit
Console(config-mld-profile)#
```

range

This command specifies multicast group addresses for a profile. Use the **no** form to delete addresses from a profile.

Syntax

[**no**] **range** *low-ipv6-address* [*high-ipv6-address*]

low-ipv6-address - A valid IPv6 address (X:X:X:X::X) of a multicast group or start of a group range.

high-ipv6-address - A valid IPv6 address (X:X:X:X::X) for the end of a multicast group range.

Default Setting

None

Command Mode

MLD Profile Configuration

Command Usage

Enter this command multiple times to specify more than one multicast address or address range for a profile.

Example

```
Console(config-mld-profile)#range ff01::0101 ff01::0202
Console(config-mld-profile)#
```

ipv6 mld filter (Interface Configuration)

This command assigns an MLD filtering profile to an interface on the switch. Use the **no** form to remove a profile from an interface.

Syntax

[**no**] **ipv6 mld filter** *profile-number*

profile-number - An MLD filter profile number. (Range: 1-4294967295)

Default Setting

None

Command Mode

Interface Configuration

Command Usage

- The MLD filtering profile must first be created with the ipv6 mld profile command before being able to assign it to an interface.
- Only one profile can be assigned to an interface.
- A profile can also be assigned to a trunk interface. When ports are configured as trunk members, the trunk uses the filtering profile assigned to the first port member in the trunk.

Example

```
Console(config)#interface ethernet 1/1
Console(config-if)#ipv6 mld filter 19
Console(config-if)#
```

ipv6 mld max-groups

This command configures the maximum number of MLD groups that an interface can join. Use the **no** form to restore the default setting.

Syntax

ipv6 mld max-groups *number*

no ipv6 mld max-groups

number - The maximum number of multicast groups an interface can join at the same time. (Range: 1-255)

Default Setting

255

Command Mode
Interface Configuration (Ethernet, Port Channel)

Command Usage
- MLD throttling sets a maximum number of multicast groups that a port can join at the same time. When the maximum number of groups is reached on a port, the switch can take one of two actions; either "deny" or "replace." If the action is set to deny, any new MLD join reports will be dropped. If the action is set to replace, the switch randomly removes an existing group and replaces it with the new multicast group.
- MLD throttling can also be set on a trunk interface. When ports are configured as trunk members, the trunk uses the throttling settings of the first port member in the trunk.
- If the maximum number of MLD groups is set to the default value, the running status of MLD throttling will change to false. This means that any configuration for MLD throttling will have no effect until the maximum number of MLD groups is configured to another value.

Example
```
Console(config)#interface ethernet 1/1
Console(config-if)#ipv6 mld max-groups 10
Console(config-if)#
```

ipv6 mld max-groups action

This command sets the MLD throttling action for an interface on the switch.

Syntax
ipv6 mld max-groups action {**deny** | **replace**}

deny - The new multicast group join report is dropped.

replace - The new multicast group replaces an existing group.

Default Setting
Deny

Command Mode
Interface Configuration (Ethernet)

Command Usage
When the maximum number of groups is reached on a port, the switch can take one of two actions; either "deny" or "replace." If the action is set to deny, any new MLD join reports will be dropped. If the action is set to replace, the switch randomly removes an existing group and replaces it with the new multicast group.

Example

```
Console(config)#interface ethernet 1/1
Console(config-if)#ipv6 mld max-groups action replace
Console(config-if)#
```

ipv6 mld query-drop

This command drops any received MLD query packets. Use the no form to restore the default setting.

Syntax

[**no**] **ipv6 mld query-drop**

Default Setting

Disabled

Command Mode

Interface Configuration (Ethernet, Port Channel)

Command Usage

This command can be used to drop any query packets received on the specified interface. If this switch is acting as a Querier, this prevents it from being affected by messages received from another Querier.

Example

```
Console(config)#interface ethernet 1/1
Console(config-if)#ipv6 mld query-drop
Console(config-if)#
```

show ipv6 mld filter

This command displays the global and interface settings for MLD filtering.

Syntax

show ipv6 mld filter [**interface** *interface*]

interface

ethernet *unit/port*

unit - Unit identifier. (Range: 1)

port - Port number. (Range: 1-52)

port-channel *channel-id* (Range: 1-8)

Default Setting

None

Command Mode

Privileged Exec

Example

```
Console#show ipv6 mld filter
 MLD filter Enabled
Console#show ipv6 mld filter interface ethernet 1/3
Ethernet 1/3 information
--------------------------------
 MLD  Profile 19
 Deny
 Range  ff01::101         ff01::faa
Console#
```

show ipv6 mld profile

This command displays MLD filtering profiles created on the switch.

Syntax

show ipv6 mld profile [*profile-number*]

profile-number - An existing MLD filter profile number. (Range: 1-4294967295)

Default Setting

None

Command Mode

Privileged Exec

Example

```
Console#show ipv6 mld profile
 MLD Profile 19
 MLD Profile 50
Console#show ipv6 mld profile 19
 MLD  Profile 19
 Deny
 Range  ff01::101         ff01::faa
Console#
```

show ipv6 mld query-drop

This command shows if the specified interface is configured to drop MLD query packets.

Syntax

show ipv6 mld query-drop interface [*interface*]

interface

ethernet *unit*/*port*

unit - Unit identifier. (Range: 1)

port - Port number. (Range: 1-52)

port-channel *channel-id* (Range: 1-8)

Default Setting
None

Command Mode
Privileged Exec

Command Usage
Using this command without specifying an interface displays all interfaces.

Example

```
Console#show ipv6 mld query-drop interface ethernet 1/1
Ethernet 1/1: Enabled
Console#
```

show ipv6 mld throttle interface

This command displays the interface settings for MLD throttling.

Syntax

show ipv6 mld throttle interface [*interface*]

interface

ethernet *unit/port*

unit - Unit identifier. (Range: 1)

port - Port number. (Range: 1-52)

port-channel *channel-id* (Range: 1-8)

Default Setting
None

Command Mode
Privileged Exec

Command Usage
Using this command without specifying an interface displays information for all interfaces.

Example

```
Console#show ipv6 mld throttle interface ethernet 1/3
Eth  1/3 Information
 Status                   : TRUE
 Action                   : Replace
 Max Multicast Groups     : 10
 Current Multicast Groups : 0

Console#
```

23 LLDP Commands

Link Layer Discovery Protocol (LLDP) is used to discover basic information about neighboring devices on the local broadcast domain. LLDP is a Layer 2 protocol that uses periodic broadcasts to advertise information about the sending device. Advertised information is represented in Type Length Value (TLV) format according to the IEEE 802.1AB standard, and can include details such as device identification, capabilities and configuration settings. LLDP also defines how to store and maintain information gathered about the neighboring network nodes it discovers.

Link Layer Discovery Protocol - Media Endpoint Discovery (LLDP-MED) is an extension of LLDP intended for managing endpoint devices such as Voice over IP phones and network switches. The LLDP-MED TLVs advertise information such as network policy, power, inventory, and device location details. LLDP and LLDP-MED information can be used by SNMP applications to simplify troubleshooting, enhance network management, and maintain an accurate network topology.

Table 121: LLDP Commands

Command	Function	Mode
lldp	Enables LLDP globally on the switch	GC
lldp holdtime-multiplier	Configures the time-to-live (TTL) value sent in LLDP advertisements	GC
lldp med-fast-start-count	Configures how many medFastStart packets are transmitted	GC
lldp notification-interval	Configures the allowed interval for sending SNMP notifications about LLDP changes	GC
lldp refresh-interval	Configures the periodic transmit interval for LLDP advertisements	GC
lldp reinit-delay	Configures the delay before attempting to re-initialize after LLDP ports are disabled or the link goes down	GC
lldp tx-delay	Configures a delay between the successive transmission of advertisements initiated by a change in local LLDP MIB variables	GC
lldp admin-status	Enables LLDP transmit, receive, or transmit and receive mode on the specified port	IC
lldp basic-tlv management-ip-address	Configures an LLDP-enabled port to advertise the management address for this device	IC
lldp basic-tlv port-description	Configures an LLDP-enabled port to advertise its port description	IC
lldp basic-tlv system-capabilities	Configures an LLDP-enabled port to advertise its system capabilities	IC

Table 121: LLDP Commands (Continued)

Command	Function	Mode
lldp basic-tlv system-description	Configures an LLDP-enabled port to advertise the system description	IC
lldp basic-tlv system-name	Configures an LLDP-enabled port to advertise its system name	IC
lldp dot1-tlv proto-ident*	Configures an LLDP-enabled port to advertise the supported protocols	IC
lldp dot1-tlv proto-vid*	Configures an LLDP-enabled port to advertise port-based protocol related VLAN information	IC
lldp dot1-tlv pvid*	Configures an LLDP-enabled port to advertise its default VLAN ID	IC
lldp dot1-tlv vlan-name*	Configures an LLDP-enabled port to advertise its VLAN name	IC
lldp dot3-tlv link-agg	Configures an LLDP-enabled port to advertise its link aggregation capabilities	IC
lldp dot3-tlv mac-phy	Configures an LLDP-enabled port to advertise its MAC and physical layer specifications	IC
lldp dot3-tlv max-frame	Configures an LLDP-enabled port to advertise its maximum frame size	IC
lldp med-location civic-addr	Configures an LLDP-MED-enabled port to advertise its location identification details	IC
lldp med-notification	Enables the transmission of SNMP trap notifications about LLDP-MED changes	IC
lldp med-tlv inventory	Configures an LLDP-MED-enabled port to advertise its inventory identification details	IC
lldp med-tlv location	Configures an LLDP-MED-enabled port to advertise its location identification details	IC
lldp med-tlv med-cap	Configures an LLDP-MED-enabled port to advertise its Media Endpoint Device capabilities	IC
lldp med-tlv network-policy	Configures an LLDP-MED-enabled port to advertise its network policy configuration	IC
lldp notification	Enables the transmission of SNMP trap notifications about LLDP changes	IC
show lldp config	Shows LLDP configuration settings for all ports	PE
show lldp info local-device	Shows LLDP global and interface-specific configuration settings for this device	PE
show lldp info remote-device	Shows LLDP global and interface-specific configuration settings for remote devices	PE
show lldp info statistics	Shows statistical counters for all LLDP-enabled interfaces	PE

* Vendor-specific options may or may not be advertised by neighboring devices.

lldp

This command enables LLDP globally on the switch. Use the **no** form to disable LLDP.

Syntax

[**no**] **lldp**

Default Setting

Enabled

Command Mode

Global Configuration

Example

```
Console(config)#lldp
Console(config)#
```

lldp holdtime-multiplier

This command configures the time-to-live (TTL) value sent in LLDP advertisements. Use the **no** form to restore the default setting.

Syntax

lldp holdtime-multiplier *value*

no lldp holdtime-multiplier

value - Calculates the TTL in seconds based on the following rule: minimum of ((Transmission Interval * Holdtime Multiplier), or 65536)

(Range: 2 - 10)

Default Setting

Holdtime multiplier: 4
TTL: 4*30 = 120 seconds

Command Mode

Global Configuration

Command Usage

The time-to-live tells the receiving LLDP agent how long to retain all information pertaining to the sending LLDP agent if it does not transmit updates in a timely manner.

Example

```
Console(config)#lldp holdtime-multiplier 10
Console(config)#
```

lldp med-fast-start-count

This command specifies the amount of MED Fast Start LLDPDUs to transmit during the activation process of the LLDP-MED Fast Start mechanism. Use the **no** form to restore the default setting.

Syntax

lldp med-fast-start-count *packets*

no lldp med-fast-start-count

seconds - Amount of packets. (Range: 1-10 packets; Default: 4 packets)

Default Setting

4 packets

Command Mode

Global Configuration

Command Usage

This parameter is part of the timer which ensures that the LLDP-MED Fast Start mechanism is active for the port. LLDP-MED Fast Start is critical to the timely startup of LLDP, and therefore integral to the rapid availability of Emergency Call Service.

Example

```
Console(config)#lldp med-fast-start-count 6
Console(config)#
```

lldp notification-interval

This command configures the allowed interval for sending SNMP notifications about LLDP MIB changes. Use the **no** form to restore the default setting.

Syntax

lldp notification-interval *seconds*

no lldp notification-interval

seconds - Specifies the periodic interval at which SNMP notifications are sent. (Range: 5 - 3600 seconds)

Default Setting

5 seconds

Command Mode

Global Configuration

Command Usage

- This parameter only applies to SNMP applications which use data stored in the LLDP MIB for network monitoring or management.

- Information about changes in LLDP neighbors that occur between SNMP notifications is not transmitted. Only state changes that exist at the time of a notification are included in the transmission. An SNMP agent should therefore periodically check the value of lldpStatsRemTableLastChangeTime to detect any lldpRemTablesChange notification-events missed due to throttling or transmission loss.

Example

```
Console(config)#lldp notification-interval 30
Console(config)#
```

lldp refresh-interval

This command configures the periodic transmit interval for LLDP advertisements. Use the **no** form to restore the default setting.

Syntax

lldp refresh-interval *seconds*

no lldp refresh-delay

seconds - Specifies the periodic interval at which LLDP advertisements are sent. (Range: 5 - 32768 seconds)

Default Setting

30 seconds

Command Mode

Global Configuration

Example

```
Console(config)#lldp refresh-interval 60
Console(config)#
```

lldp reinit-delay

This command configures the delay before attempting to re-initialize after LLDP ports are disabled or the link goes down. Use the **no** form to restore the default setting.

Syntax

lldp reinit-delay *seconds*

no lldp reinit-delay

seconds - Specifies the delay before attempting to re-initialize LLDP. (Range: 1 - 10 seconds)

Default Setting

2 seconds

Command Mode
Global Configuration

Command Usage
When LLDP is re-initialized on a port, all information in the remote systems LLDP MIB associated with this port is deleted.

Example

```
Console(config)#lldp reinit-delay 10
Console(config)#
```

lldp tx-delay

This command configures a delay between the successive transmission of advertisements initiated by a change in local LLDP MIB variables. Use the **no** form to restore the default setting.

Syntax

lldp tx-delay *seconds*

no lldp tx-delay

seconds - Specifies the transmit delay. (Range: 1 - 8192 seconds)

Default Setting
2 seconds

Command Mode
Global Configuration

Command Usage
- The transmit delay is used to prevent a series of successive LLDP transmissions during a short period of rapid changes in local LLDP MIB objects, and to increase the probability that multiple, rather than single changes, are reported in each transmission.

- This attribute must comply with the following rule:
  (4 * tx-delay) ≤ refresh-interval

Example

```
Console(config)#lldp tx-delay 10
Console(config)#
```

lldp admin-status

This command enables LLDP transmit, receive, or transmit and receive mode on the specified port. Use the **no** form to disable this feature.

Syntax

lldp admin-status {**rx-only** | **tx-only** | **tx-rx**}

no lldp admin-status

rx-only - Only receive LLDP PDUs.

tx-only - Only transmit LLDP PDUs.

tx-rx - Both transmit and receive LLDP Protocol Data Units (PDUs).

Default Setting

tx-rx

Command Mode

Interface Configuration (Ethernet, Port Channel)

Example

```
Console(config)#interface ethernet 1/1
Console(config-if)#lldp admin-status rx-only
Console(config-if)#
```

lldp basic-tlv management-ip-address

This command configures an LLDP-enabled port to advertise the management address for this device. Use the **no** form to disable this feature.

Syntax

[**no**] **lldp basic-tlv management-ip-address**

Default Setting

Enabled

Command Mode

Interface Configuration (Ethernet, Port Channel)

Command Usage

- The management address protocol packet includes the IPv4 address of the switch. If no management address is available, the address should be the MAC address for the CPU or for the port sending this advertisement.

- The management address TLV may also include information about the specific interface associated with this address, and an object identifier indicating the type of hardware component or protocol entity associated with this address. The interface number and OID are included to assist SNMP applications to perform network discovery by indicating enterprise specific or other starting points for the search, such as the Interface or Entity MIB.

- Since there are typically a number of different addresses associated with a Layer 3 device, an individual LLDP PDU may contain more than one management address TLV.
- Every management address TLV that reports an address that is accessible on a port and protocol VLAN through the particular port should be accompanied by a port and protocol VLAN TLV that indicates the VLAN identifier (VID) associated with the management address reported by this TLV.

Example

```
Console(config)#interface ethernet 1/1
Console(config-if)#lldp basic-tlv management-ip-address
Console(config-if)#
```

lldp basic-tlv port-description

This command configures an LLDP-enabled port to advertise its port description. Use the **no** form to disable this feature.

Syntax

[**no**] **lldp basic-tlv port-description**

Default Setting

Enabled

Command Mode

Interface Configuration (Ethernet, Port Channel)

Command Usage

The port description is taken from the ifDescr object in RFC 2863, which includes information about the manufacturer, the product name, and the version of the interface hardware/software.

Example

```
Console(config)#interface ethernet 1/1
Console(config-if)#lldp basic-tlv port-description
Console(config-if)#
```

lldp basic-tlv system-capabilities

This command configures an LLDP-enabled port to advertise its system capabilities. Use the **no** form to disable this feature.

Syntax

[**no**] **lldp basic-tlv system-capabilities**

Default Setting

Enabled

Command Mode
Interface Configuration (Ethernet, Port Channel)

Command Usage
The system capabilities identifies the primary function(s) of the system and whether or not these primary functions are enabled. The information advertised by this TLV is described in IEEE 802.1AB.

Example

```
Console(config)#interface ethernet 1/1
Console(config-if)#lldp basic-tlv system-capabilities
Console(config-if)#
```

lldp basic-tlv system-description

This command configures an LLDP-enabled port to advertise the system description. Use the **no** form to disable this feature.

Syntax

[**no**] **lldp basic-tlv system-description**

Default Setting
Enabled

Command Mode
Interface Configuration (Ethernet, Port Channel)

Command Usage
The system description is taken from the sysDescr object in RFC 3418, which includes the full name and version identification of the system's hardware type, software operating system, and networking software.

Example

```
Console(config)#interface ethernet 1/1
Console(config-if)#lldp basic-tlv system-description
Console(config-if)#
```

lldp basic-tlv system-name

This command configures an LLDP-enabled port to advertise the system name. Use the **no** form to disable this feature.

Syntax

[**no**] **lldp basic-tlv system-name**

Default Setting
Enabled

Command Mode
Interface Configuration (Ethernet, Port Channel)

Command Usage
The system name is taken from the sysName object in RFC 3418, which contains the system's administratively assigned name, and is in turn based on the hostname command.

Example

```
Console(config)#interface ethernet 1/1
Console(config-if)#lldp basic-tlv system-name
Console(config-if)#
```

lldp dot1-tlv proto-ident

This command configures an LLDP-enabled port to advertise the supported protocols. Use the **no** form to disable this feature.

Syntax

[**no**] **lldp dot1-tlv proto-ident**

Default Setting
Enabled

Command Mode
Interface Configuration (Ethernet, Port Channel)

Command Usage
This option advertises the protocols that are accessible through this interface.

Example

```
Console(config)#interface ethernet 1/1
Console(config-if)#no lldp dot1-tlv proto-ident
Console(config-if)#
```

lldp dot1-tlv proto-vid

This command configures an LLDP-enabled port to advertise port-based protocol VLAN information. Use the **no** form to disable this feature.

Syntax

[**no**] **lldp dot1-tlv proto-vid**

Default Setting
Enabled

Command Mode
Interface Configuration (Ethernet, Port Channel)

Command Usage

This option advertises the port-based protocol VLANs configured on this interface (see "Configuring Protocol-based VLANs" on page 465).

Example

```
Console(config)#interface ethernet 1/1
Console(config-if)#no lldp dot1-tlv proto-vid
Console(config-if)#
```

lldp dot1-tlv pvid

This command configures an LLDP-enabled port to advertise its default VLAN ID. Use the **no** form to disable this feature.

Syntax

[**no**] **lldp dot1-tlv pvid**

Default Setting

Enabled

Command Mode

Interface Configuration (Ethernet, Port Channel)

Command Usage

The port's default VLAN identifier (PVID) indicates the VLAN with which untagged or priority-tagged frames are associated (see the switchport native vlan command).

Example

```
Console(config)#interface ethernet 1/1
Console(config-if)#no lldp dot1-tlv pvid
Console(config-if)#
```

lldp dot1-tlv vlan-name

This command configures an LLDP-enabled port to advertise its VLAN name. Use the **no** form to disable this feature.

Syntax

[**no**] **lldp dot1-tlv vlan-name**

Default Setting

Enabled

Command Mode

Interface Configuration (Ethernet, Port Channel)

Command Usage

This option advertises the name of all VLANs to which this interface has been assigned. See "switchport allowed vlan" on page 453 and "protocol-vlan protocol-group (Configuring Interfaces)" on page 467.

Example

```
Console(config)#interface ethernet 1/1
Console(config-if)#no lldp dot1-tlv vlan-name
Console(config-if)#
```

lldp dot3-tlv link-agg

This command configures an LLDP-enabled port to advertise link aggregation capabilities. Use the **no** form to disable this feature.

Syntax

[**no**] **lldp dot3-tlv link-agg**

Default Setting

Enabled

Command Mode

Interface Configuration (Ethernet, Port Channel)

Command Usage

This option advertises link aggregation capabilities, aggregation status of the link, and the 802.3 aggregated port identifier if this interface is currently a link aggregation member.

Example

```
Console(config)#interface ethernet 1/1
Console(config-if)#no lldp dot3-tlv link-agg
Console(config-if)#
```

lldp dot3-tlv mac-phy

This command configures an LLDP-enabled port to advertise its MAC and physical layer capabilities. Use the **no** form to disable this feature.

Syntax

[**no**] **lldp dot3-tlv mac-phy**

Default Setting

Enabled

Command Mode

Interface Configuration (Ethernet, Port Channel)

Command Usage

This option advertises MAC/PHY configuration/status which includes information about auto-negotiation support/capabilities, and operational Multistation Access Unit (MAU) type.

Example

```
Console(config)#interface ethernet 1/1
Console(config-if)#no lldp dot3-tlv mac-phy
Console(config-if)#
```

lldp dot3-tlv max-frame

This command configures an LLDP-enabled port to advertise its maximum frame size. Use the **no** form to disable this feature.

Syntax

[**no**] **lldp dot3-tlv max-frame**

Default Setting

Enabled

Command Mode

Interface Configuration (Ethernet, Port Channel)

Command Usage

Refer to "Frame Size" on page 99 for information on configuring the maximum frame size for this switch.

Example

```
Console(config)#interface ethernet 1/1
Console(config-if)#lldp dot3-tlv max-frame
Console(config-if)#
```

lldp med-location civic-addr

This command configures an LLDP-MED-enabled port to advertise its location identification details. Use the **no** form to restore the default settings.

Syntax

lldp med-location civic-addr [[**country** *country-code*] | [**what** *device-type*] | [*ca-type ca-value*]]

no lldp med-location civic-addr [[**country**] | [**what**] | [*ca-type*]]

country-code – The two-letter ISO 3166 country code in capital ASCII letters. (Example: DK, DE or US)

device-type – The type of device to which the location applies.

0 – Location of DHCP server.

1 – Location of network element closest to client.

2 – Location of client.

ca-type – A one-octet descriptor of the data civic address value. (Range: 0-255)

ca-value – Description of a location. (Range: 1-32 characters)

Default Setting

Not advertised
No description

Command Mode

Interface Configuration (Ethernet, Port Channel)

Command Usage

- Use this command without any keywords to advertise location identification details.
- Use the *ca-type* to advertise the physical location of the device, that is the city, street number, building and room information. The address location is specified as a type and value pair, with the civic address (CA) type being defined in RFC 4776. The following table describes some of the CA type numbers and provides examples.

Table 122: LLDP MED Location CA Types

CA Type	Description	CA Value Example
1	National subdivisions (state, canton, province)	California
2	County, parish	Orange
3	City, township	Irvine
4	City division, borough, city district	West Irvine
5	Neighborhood, block	Riverside

Table 122: LLDP MED Location CA Types (Continued)

CA Type	Description	CA Value Example
6	Group of streets below the neighborhood level	Exchange
18	Street suffix or type	Avenue
19	House number	320
20	House number suffix	A
21	Landmark or vanity address	Tech Center
26	Unit (apartment, suite)	Apt 519
27	Floor	5
28	Room	509B

Any number of CA type and value pairs can be specified for the civic address location, as long as the total does not exceed 250 characters.

- For the location options defined for *device-type*, normally option **2** is used to specify the location of the client device. In situations where the client device location is not known, **0** and **1** can be used, providing the client device is physically close to the DHCP server or network element.

Example

The following example enables advertising location identification details.

```
Console(config)#interface ethernet 1/1
Console(config-if)#lldp med-location civic-addr
Console(config-if)#lldp med-location civic-addr 1 California
Console(config-if)#lldp med-location civic-addr 2 Orange
Console(config-if)#lldp med-location civic-addr 3 Irvine
Console(config-if)#lldp med-location civic-addr 4 West Irvine
Console(config-if)#lldp med-location civic-addr 6 Exchange
Console(config-if)#lldp med-location civic-addr 18 Avenue
Console(config-if)#lldp med-location civic-addr 19 320
Console(config-if)#lldp med-location civic-addr 27 5
Console(config-if)#lldp med-location civic-addr 28 509B
Console(config-if)#lldp med-location civic-addr country US
Console(config-if)#lldp med-location civic-addr what 2
Console(config-if)#
```

lldp med-notification

This command enables the transmission of SNMP trap notifications about LLDP-MED changes. Use the **no** form to disable LLDP-MED notifications.

Syntax

[**no**] **lldp med-notification**

Default Setting

Disabled

Command Mode
Interface Configuration (Ethernet, Port Channel)

Command Usage
- This option sends out SNMP trap notifications to designated target stations at the interval specified by the lldp notification-interval command. Trap notifications include information about state changes in the LLDP MIB (IEEE 802.1AB), the LLDP-MED MIB (ANSI/TIA 1057), or organization-specific LLDP-EXT-DOT1 and LLDP-EXT-DOT3 MIBs.
- SNMP trap destinations are defined using the snmp-server host command.
- Information about additional changes in LLDP neighbors that occur between SNMP notifications is not transmitted. Only state changes that exist at the time of a trap notification are included in the transmission. An SNMP agent should therefore periodically check the value of lldpStatsRemTableLastChangeTime to detect any lldpRemTablesChange notification-events missed due to throttling or transmission loss.

Example
```
Console(config)#interface ethernet 1/1
Console(config-if)#lldp med-notification
Console(config-if)#
```

lldp med-tlv inventory

This command configures an LLDP-MED-enabled port to advertise its inventory identification details. Use the **no** form to disable this feature.

Syntax
[**no**] **lldp med-tlv inventory**

Default Setting
Enabled

Command Mode
Interface Configuration (Ethernet, Port Channel)

Command Usage
This option advertises device details useful for inventory management, such as manufacturer, model, software version and other pertinent information.

Example
```
Console(config)#interface ethernet 1/1
Console(config-if)#no lldp med-tlv inventory
Console(config-if)#
```

lldp med-tlv location

This command configures an LLDP-MED-enabled port to advertise its location identification details. Use the **no** form to disable this feature.

Syntax

[**no**] **lldp med-tlv location**

Default Setting

Enabled

Command Mode

Interface Configuration (Ethernet, Port Channel)

Command Usage

This option advertises location identification details.

Example

```
Console(config)#interface ethernet 1/1
Console(config-if)#lldp med-tlv location
Console(config-if)#
```

lldp med-tlv med-cap

This command configures an LLDP-MED-enabled port to advertise its Media Endpoint Device capabilities. Use the **no** form to disable this feature.

Syntax

[**no**] **lldp med-tlv med-cap**

Default Setting

Enabled

Command Mode

Interface Configuration (Ethernet, Port Channel)

Command Usage

This option advertises LLDP-MED TLV capabilities, allowing Media Endpoint and Connectivity Devices to efficiently discover which LLDP-MED related TLVs are supported on the switch.

Example

```
Console(config)#interface ethernet 1/1
Console(config-if)#lldp med-tlv med-cap
Console(config-if)#
```

lldp med-tlv network-policy

This command configures an LLDP-MED-enabled port to advertise its network policy configuration. Use the **no** form to disable this feature.

Syntax

[**no**] **lldp med-tlv network-policy**

Default Setting

Enabled

Command Mode

Interface Configuration (Ethernet, Port Channel)

Command Usage

This option advertises network policy configuration information, aiding in the discovery and diagnosis of VLAN configuration mismatches on a port. Improper network policy configurations frequently result in voice quality degradation or complete service disruption.

Example

```
Console(config)#interface ethernet 1/1
Console(config-if)#lldp med-tlv network-policy
Console(config-if)#
```

lldp notification

This command enables the transmission of SNMP trap notifications about LLDP changes. Use the **no** form to disable LLDP notifications.

Syntax

[**no**] **lldp notification**

Default Setting

Enabled

Command Mode

Interface Configuration (Ethernet, Port Channel)

Command Usage

- This option sends out SNMP trap notifications to designated target stations at the interval specified by the lldp notification-interval command. Trap notifications include information about state changes in the LLDP MIB (IEEE 802.1AB), or organization-specific LLDP-EXT-DOT1 and LLDP-EXT-DOT3 MIBs.
- SNMP trap destinations are defined using the snmp-server host command.
- Information about additional changes in LLDP neighbors that occur between SNMP notifications is not transmitted. Only state changes that exist at the time of a trap notification are included in the transmission. An SNMP agent should

therefore periodically check the value of lldpStatsRemTableLastChangeTime to detect any lldpRemTablesChange notification-events missed due to throttling or transmission loss.

Example

```
Console(config)#interface ethernet 1/1
Console(config-if)#lldp notification
Console(config-if)#
```

show lldp config

This command shows LLDP configuration settings for all ports.

Syntax

show lldp config [**detail** *interface*]

detail - Shows configuration summary.

interface

ethernet *unit/port*

unit - Unit identifier. (Range: 1)

port - Port number. (Range: 1-52)

port-channel *channel-id* (Range: 1-8)

Command Mode

Privileged Exec

Example

The following example shows all basic LLDP parameters are enabled on Port 1.

```
Console#show lldp config
LLDP Global Configuation
 LLDP Enabled                  : Yes
 LLDP Transmit Interval        : 30 seconds
 LLDP Hold Time Multiplier     : 4
 LLDP Delay Interval           : 2 seconds
 LLDP Re-initialization Delay  : 2 seconds
 LLDP Notification Interval    : 5 seconds
 LLDP MED Fast Start Count     : 4

LLDP Port Configuration
 Port     Admin Status Notification Enabled
 -------- ------------ --------------------
 Eth 1/1  Tx-Rx        True
 Eth 1/2  Tx-Rx        True
 Eth 1/3  Tx-Rx        True
 Eth 1/4  Tx-Rx        True
 Eth 1/5  Tx-Rx        True
.
.
.
Console#show lldp config detail ethernet 1/1
LLDP Port Configuration Detail
 Port                           : Eth 1/1
```

```
 Admin Status                    : Tx-Rx
 Notification Enabled            : True
 Basic TLVs Advertised           : port-description
                                   system-name
                                   system-description
                                   system-capabilities
                                   management-ip-address
 802.1 specific TLVs Advertised : port-vid
                                   vlan-name
                                   proto-vlan
                                   proto-ident
 802.3 specific TLVs Advertised : mac-phy
                                   link-agg
                                   max-frame
 MED Notification Status         : Enabled
 MED Enabled TLVs Advertised     : med-cap
                                   network-policy
                                   location
                                   inventory
 MED Location Identification:
  Location Data Format : Civic Address LCI
  Civic Address Status : Enabled
  Country Name         : US
  What                 : 2
  CA-Type              : 1
  CA-Value             : Alabama
  CA-Type              : 2
  CA-Value             : Tuscaloosa

Console#
```

show lldp info local-device

This command shows LLDP global and interface-specific configuration settings for this device.

Syntax

show lldp info local-device [**detail** *interface*]

detail - Shows configuration summary.

interface

ethernet *unit/port*

unit - Unit identifier. (Range: 1)

port - Port number. (Range: 1-52)

port-channel *channel-id* (Range: 1-8)

Command Mode

Privileged Exec

Example

```
Console#show lldp info local-device
 LLDP Local Global Information
  Chassis Type : MAC Address
  Chassis ID   : 00-01-02-03-04-05
  System Name  :
```

```
  System Description : GEL-5261
  System Capabilities Support : Bridge
  System Capabilities Enabled : Bridge
  Management Address : 192.168.0.101 (IPv4)

 LLDP Port Information
  Port    Port ID Type     Port ID           Port Description
 -------- ---------------- ----------------- -------------------------------
 Eth 1/1  MAC Address      00-12-CF-DA-FC-E9 Ethernet Port on unit 0, port 1
 Eth 1/2  MAC Address      00-12-CF-DA-FC-EA Ethernet Port on unit 0, port 2
 Eth 1/3  MAC Address      00-12-CF-DA-FC-EB Ethernet Port on unit 0, port 3
 Eth 1/4  MAC Address      00-12-CF-DA-FC-EC Ethernet Port on unit 0, port 4
.
.
.
Console#show lldp info local-device detail ethernet 1/1
LLDP Local Port Information Detail
 Port             : Eth 1/1
 Port ID Type     : MAC Address
 Port ID          : 00-12-CF-DA-FC-E9
 Port Description : Ethernet Port on unit 1, port 1
 MED Capability   : LLDP-MED Capabilities
                    Network Policy
                    Location Identification
                    Inventory

Console#
```

show lldp info remote-device

This command shows LLDP global and interface-specific configuration settings for remote devices attached to an LLDP-enabled port.

Syntax

show lldp info remote-device [**detail** *interface*]

detail - Shows detailed information.

interface

ethernet *unit/port*

unit - Unit identifier. (Range: 1)

port - Port number. (Range: 1-52)

port-channel *channel-id* (Range: 1-8)

Command Mode

Privileged Exec

Example

Note that an IP phone or other end-node device which advertises LLDP-MED capabilities must be connected to the switch for information to be displayed in the "LLDP-MED Capability" and other related fields.

```
Console#show lldp info remote-device
 LLDP Remote Devices Information
  Interface Chassis ID        Port ID           System Name
  --------- ---------------- ----------------- --------------------
  Eth 1/1   00-E0-0C-00-00-FD 00-E0-0C-00-01-02
```

```
Console#show lldp info remote-device detail ethernet 1/1
LLDP Remote Devices Information Detail
----------------------------------------------------------------
 Index                 : 2
 Chassis Type          : MAC Address
 Chassis ID            : 70-72-CF-91-1C-B2
 Port ID Type          : MAC Address
 Port ID               : 70-72-CF-91-1C-B4
 Time To Live          : 120 seconds
 Port Description      : Ethernet Port on unit 1, port 2
 System Description    : GEL-5261
 System Capabilities   : Bridge
 Enabled Capabilities  : Bridge

 Management Address : 192.168.0.4 (IPv4)

 Port VLAN ID : 1

 Port and Protocol VLAN ID : supported, disabled

 VLAN Name : VLAN    1 - DefaultVlan

 Protocol Identity (Hex) : 88-CC

 MAC/PHY Configuration/Status
  Port Auto-neg Supported            : Yes
  Port Auto-neg Enabled              : Yes
  Port Auto-neg Advertised Cap (Hex) : 6C00
  Port MAU Type                      : 16

 Power via MDI
  Power Class             : PSE
  Power MDI Supported     : Yes
  Power MDI Enabled       : Yes
  Power Pair Controllable : No
  Power Pairs             : Spare
  Power Classification    : Class 1

 Link Aggregation
  Link Aggregation Capable : Yes
  Link Aggregation Enable  : No
  Link Aggregation Port ID : 0

 Max Frame Size : 1522

Console#
```

The following example shows information which is displayed for end-node device which advertises LLDP-MED TLVs.

```
...
  LLDP-MED Capability :
    Device Class                    : Network Connectivity
    Supported Capabilities          : LLDP-MED Capabilities
                                      Network Policy
                                      Location Identification
                                      Extended Power via MDI - PSE
                                      Inventory
    Current Capabilities            : LLDP-MED Capabilities
                                      Location Identification
                                      Extended Power via MDI - PSE
```

```
                                      Inventory
  Location Identification :
    Location Data Format            : Civic Address LCI
    Country Name                    : TW
    What                            : 2
  Extended Power via MDI :
    Power Type                      : PSE
    Power Source                    : Unknown
    Power Priority                  : Unknown
    Power Value                     : 0 Watts
  Inventory          :
    Hardware Revision               : R0A
    Firmware Revision               : 1.2.6.0
    Software Revision               : 1.2.6.0
    Serial Number                   : S123456
    Manufacture Name                : Prye
    Model Name                      : VP101
    Asset ID                        : 340937
Console#
```

show lldp info statistics

This command shows statistics based on traffic received through all attached LLDP-enabled interfaces.

Syntax

show lldp info statistics [**detail** *interface*]

detail - Shows configuration summary.

interface

ethernet *unit/port*

unit - Unit identifier. (Range: 1)

port - Port number. (Range: 1-52)

port-channel *channel-id* (Range: 1-8)

Command Mode

Privileged Exec

Example

```
Console#show lldp info statistics
LLDP Global Statistics
 Neighbor Entries List Last Updated : 485 seconds
 New Neighbor Entries Count         : 2
 Neighbor Entries Deleted Count     : 1
 Neighbor Entries Dropped Count     : 0
 Neighbor Entries Ageout Count      : 1

LLDP Port Statistics
 Port     NumFramesRecvd NumFramesSent NumFramesDiscarded
 -------- -------------- ------------- ------------------
 Eth 1/1              12            12                  0
 Eth 1/2              17            17                  0
 Eth 1/3               0             0                  0
 Eth 1/4               0             0                  0
 Eth 1/5               0             0                  0
```

```
:
Console#show lldp info statistics detail ethernet 1/1
LLDP Port Statistics Detail
 Port Name         : Eth 1/1
 Frames Discarded  : 0
 Frames Invalid    : 0
 Frames Received   : 12
 Frames Sent       : 12
 TLVs Unrecognized : 0
 TLVs Discarded    : 0
 Neighbor Ageouts  : 1
Console#
```

24 Domain Name Service Commands

These commands are used to configure Domain Naming System (DNS) services. Entries can be manually configured in the DNS domain name to IP address mapping table, default domain names configured, or one or more name servers specified to use for domain name to address translation.

Note that domain name services will not be enabled until at least one name server is specified with the ip name-server command and domain lookup is enabled with the ip domain-lookup command.

Table 123: Address Table Commands

Command	Function	Mode
DNS		
ip domain-list	Defines a list of default domain names for incomplete host names	GC
ip domain-lookup	Enables DNS-based host name-to-address translation	GC
ip domain-name	Defines a default domain name for incomplete host names	GC
ip host	Creates a static IPv4 host name-to-address mapping	GC
ip name-server	Specifies the address of one or more name servers to use for host name-to-address translation	GC
ipv6 host	Creates a static IPv6 host name-to-address mapping	GC
clear dns cache	Clears all entries from the DNS cache	PE
clear host	Deletes entries from the host name-to-address table	PE
show dns	Displays the configuration for DNS services	PE
show dns cache	Displays entries in the DNS cache	PE
show hosts	Displays the static host name-to-address mapping table	PE
mDNS		
ip mdns	Enables multicast DNS	GC
show ip mdns	Shows configuration state for multicast DNS	GC

DNS Commands

ip domain-list

This command defines a list of domain names that can be appended to incomplete host names (i.e., host names passed from a client that are not formatted with dotted notation). Use the **no** form to remove a name from this list.

Syntax

[**no**] **ip domain-list** *name*

name - Name of the host. Do not include the initial dot that separates the host name from the domain name. (Range: 1-127 characters)

Default Setting

None

Command Mode

Global Configuration

Command Usage

- Domain names are added to the end of the list one at a time.
- When an incomplete host name is received by the DNS service on this switch, it will work through the domain list, appending each domain name in the list to the host name, and checking with the specified name servers for a match.
- If there is no domain list, the domain name specified with the ip domain-name command is used. If there is a domain list, the default domain name is not used.

Example

This example adds two domain names to the current list and then displays the list.

```
Console(config)#ip domain-list sample.com.jp
Console(config)#ip domain-list sample.com.uk
Console(config)#end
Console#show dns
Domain Lookup Status:
    DNS Disabled
Default Domain Name:
    sample.com
Domain Name List:
    sample.com.jp
    sample.com.uk
Name Server List:
Console#
```

Related Commands

ip domain-name (622)

ip domain-lookup

This command enables DNS host name-to-address translation. Use the **no** form to disable DNS.

Syntax

[**no**] **ip domain-lookup**

Default Setting

Disabled

Command Mode

Global Configuration

Command Usage

- At least one name server must be specified before DNS can be enabled.
- If one or more name servers are configured, but DNS is not yet enabled and the switch receives a DHCP packet containing a DNS field with a list of DNS servers, then the switch will automatically enabled DNS host name-to-address translation.
- If all name servers are deleted, DNS will automatically be disabled.

Example

This example enables DNS and then displays the configuration.

```
Console(config)#ip domain-lookup
Console(config)#end
Console#show dns
Domain Lookup Status:
    DNS Enabled
Default Domain Name:
    sample.com
Domain Name List:
    sample.com.jp
    sample.com.uk
Name Server List:
    192.168.1.55
    10.1.0.55
Console#
```

Related Commands

ip domain-name (622)
ip name-server (623)

ip domain-name

This command defines the default domain name appended to incomplete host names (i.e., host names passed from a client that are not formatted with dotted notation). Use the **no** form to remove the current domain name.

Syntax

ip domain-name *name*

no ip domain-name

name - Name of the host. Do not include the initial dot that separates the host name from the domain name. (Range: 1-127 characters)

Default Setting

None

Command Mode

Global Configuration

Example

```
Console(config)#ip domain-name sample.com
Console(config)#end
Console#show dns
Domain Lookup Status:
    DNS Disabled
Default Domain Name:
    sample.com
Domain Name List:
Name Server List:
Console#
```

Related Commands

ip domain-list (620)
ip name-server (623)
ip domain-lookup (621)

ip host

This command creates a static entry in the DNS table that maps a host name to an IPv4 address. Use the **no** form to remove an entry.

Syntax

[**no**] **ip host** *name address*

name - Name of an IPv4 host. (Range: 1-127 characters)

address - Corresponding IPv4 address.

Default Setting

No static entries

Command Mode

Global Configuration

Command Usage

Use the **no ip host** command to clear static entries, or the clear host command to clear dynamic entries.

Example

This example maps an IPv4 address to a host name.

```
Console(config)#ip host rd5 192.168.1.55
Console(config)#end
Console#show hosts
No.  Flag Type    IP Address            TTL   Domain
---- ---- ------- --------------------  ----- ------------------------------
   0    2 Address 192.168.1.55                rd5
Console#
```

ip name-server

This command specifies the address of one or more domain name servers to use for name-to-address resolution. Use the **no** form to remove a name server from this list.

Syntax

[**no**] **ip name-server** *server-address1* [*server-address2* … *server-address6*]

server-address1 - IPv4 or IPv6 address of domain-name server.

server-address2 … *server-address6* - IPv4 or IPv6 address of additional domain-name servers.

Default Setting

None

Command Mode

Global Configuration

Command Usage

The listed name servers are queried in the specified sequence until a response is received, or the end of the list is reached with no response.

Example

This example adds two domain-name servers to the list and then displays the list.

```
Console(config)#ip name-server 192.168.1.55 10.1.0.55
Console(config)#end
Console#show dns
Domain Lookup Status:
    DNS disabled
Default Domain Name:
    sample.com
Domain Name List:
    sample.com.jp
```

```
    sample.com.uk
Name Server List:
    192.168.1.55
    10.1.0.55
Console#
```

Related Commands

ip domain-name (622)
ip domain-lookup (621)

ipv6 host

This command creates a static entry in the DNS table that maps a host name to an IPv6 address. Use the **no** form to remove an entry.

Syntax

[**no**] **ipv6 host** *name ipv6-address*

name - Name of an IPv6 host. (Range: 1-127 characters)

ipv6-address - Corresponding IPv6 address. This address must be entered according to RFC 2373 "IPv6 Addressing Architecture," using 8 colon-separated 16-bit hexadecimal values. One double colon may be used in the address to indicate the appropriate number of zeros required to fill the undefined fields.

Default Setting

No static entries

Command Mode

Global Configuration

Example

This example maps an IPv6 address to a host name.

```
Console(config)#ipv6 host rd6 2001:0db8:1::12
Console(config)#end
Console#show hosts
No.  Flag Type    IP Address            TTL   Domain
---- ---- ------- --------------------  ----- -------------------------------
   0    2 Address 192.168.1.55                rd5
   1    2 Address 2001:DB8:1::12              rd6
Console#
```

clear dns cache

This command clears all entries in the DNS cache.

Command Mode

Privileged Exec

Example

```
Console#clear dns cache
Console#show dns cache
No.     Flag    Type    IP Address      TTL     Host
------- ------- ------- --------------- ------- --------

Console#
```

clear host

This command deletes dynamic entries from the DNS table.

Syntax

clear host {*name* | *}

name - Name of the host. (Range: 1-127 characters)

* - Removes all entries.

Default Setting

None

Command Mode

Privileged Exec

Command Usage

Use the **clear host** command to clear dynamic entries, or the no ip host command to clear static entries.

Example

This example clears all dynamic entries from the DNS table.

```
Console#clear host *
Console#
```

show dns

This command displays the configuration of the DNS service.

Command Mode

Privileged Exec

Example

```
Console#show dns
Domain Lookup Status:
    DNS enabled
Default Domain Name:
    sample.com
Domain Name List:
    sample.com.jp
    sample.com.uk
Name Server List:
    192.168.1.55
    10.1.0.55
Console#
```

show dns cache

This command displays entries in the DNS cache.

Command Mode

Privileged Exec

Example

```
Console#show dns cache
No.     Flag    Type    IP Address      TTL     Host
------- ------- ------- --------------- ------- --------
      3       4 Host    209.131.36.158      115 www-real.wa1.b.yahoo.com
      4       4 CNAME   POINTER TO:3        115 www.yahoo.com
      5       4 CNAME   POINTER TO:3        115 www.wa1.b.yahoo.com
Console#
```

Table 124: show dns cache - display description

Field	Description
No.	The entry number for each resource record.
Flag	The flag is always “4” indicating a cache entry and therefore unreliable.
Type	This field includes “Host” which specifies the primary name for the owner, and “CNAME” which specifies multiple domain names (or aliases) which are mapped to the same IP address as an existing entry.
IP Address	The IP address associated with this record.
TTL	The time to live reported by the name server.
Host	The host name associated with this record.

show hosts

This command displays the static host name-to-address mapping table.

Command Mode

Privileged Exec

Example

Note that a host name will be displayed as an alias if it is mapped to the same address(es) as a previously configured entry.

```
Console#show hosts
No.  Flag Type    IP Address            TTL   Host
---- ---- ------- --------------------  ----- -------------------------------
   0    2 Address 192.168.1.55                rd5
   1    2 Address 2001:DB8:1::12              rd6
   3    4 Address 209.131.36.158           65 www-real.wa1.b.yahoo.com
   4    4 CNAME   POINTER TO:3             65 www.yahoo.com
   5    4 CNAME   POINTER TO:3             65 www.wa1.b.yahoo.com
Console#
```

Table 125: show hosts - display description

Field	Description
No.	The entry number for each resource record.
Flag	The field displays “2” for a static entry, or “4” for a dynamic entry stored in the cache.
Type	This field includes “Address” which specifies the primary name for the owner, and “CNAME” which specifies multiple domain names (or aliases) which are mapped to the same IP address as an existing entry.
IP Address	The IP address associated with this record.
TTL	The time to live reported by the name server. This field is always blank for static entries.
Host	The host name associated with this record.

Multicast DNS Commands

ip mdns

This command enables multicast DNS. Use the **no** form to disable this feature.

Syntax

[**no**] **ip mdns**

Default Setting

Disabled

Command Mode
Global Configuration

Command Usage
Use this command to enable multicast DNS host name-to-address mapping on the local network without the need for a dedicated DNS server. For more information on this command refer to the *Web Management Guide*.

Example

```
Console(config)#ip mdns
Console(config)#
```

show ip mdns

This command displays the configuration state multicast DNS service.

Command Mode
Privileged Exec

Example

```
Console#show ip mdns
Multicast DNS Status : Enabled
Console#
```

25 DHCP Commands

These commands are used to configure Dynamic Host Configuration Protocol (DHCP) client and and relay functions. Any VLAN interface on this switch can be configured to automatically obtain an IP address through DHCP. This switch can also be configured to relay DHCP client configuration requests to a DHCP server on another network.

Table 126: DHCP Commands

Command Group	Function
DHCP Client	Allows interfaces to dynamically acquire IP address information
DHCP Relay	Relays DHCP requests from local hosts to a remote DHCP server

DHCP Client

Use the commands in this section to allow the switch's VLAN interfaces to dynamically acquire IP address information.

Table 127: DHCP Client Commands

Command	Function	Mode
DHCP for IPv4		
ip dhcp dynamic-provision	Enables dynamic provision via DHCP	GC
ip dhcp client class-id	Specifies the DHCP client identifier for an interface	IC
ip dhcp restart client	Submits a BOOTP or DHCP client request	PE
show ip dhcp dynamic-provision	Shows the status of dynamic provision via DHCP	PE
DHCP for IPv6		
ipv6 dhcp client rapid-commit vlan	Specifies the Rapid Commit option for DHCPv6 message exchange	GC
ipv6 dhcp restart client vlan	Submits a DHCPv6 client request	PE
show ipv6 dhcp duid	Shows the DHCP Unique Identifier for this switch	PE
show ipv6 dhcp vlan	Shows DHCPv6 information for specified interface	PE

DHCP for IPv4

ip dhcp dynamic-provision

This command enables dynamic provisioning via DHCP. Use the **no** form to disable this feature.

Syntax

[**no**] **ip dhcp dynamic-provision**

Default Setting

Disabled

Command Mode

Global Configuration

Command Usage

DHCPD is the daemon used by Linux to dynamically configure TCP/IP information for client systems. To support DHCP option 66/67, you have to add corresponding statements to the configuration file of DHCPD. Information on how to complete this process are described in "Downloading a Configuration File and Other Parameters from a DHCP Server" on page 57.

The following are some alternative commands which can be added to the DHCPD to complete the dynamic provisioning process.

By default, the parameters for DHCP option 66/67 are not carried by the reply sent from the DHCP server. To ask for a DHCP reply with option 66/67, the client can inform the server that it is interested in option 66/67 by sending a DHCP request that includes a 'parameter request list' option. Besides this, the client can also send a DHCP request that includes a 'vendor class identifier' option to the server so that the DHCP server can identify the device, and determine what information should be given to requesting device.

The following are two additional sample configurations of the dhcpd.conf file for the server version dhcp-3.0.4rc1, you can choose either one of them.

1. Define the conditions in subnet section:

```
shared-network Sample1 {
    subnet 192.168.1.0 netmask 255.255.255.0 {
# option 55
    option dhcp-parameter-request-list 1,66,67;
# option 66
    option tftp-server-name "192.168.1.1";
# option 67
    option bootfile-name "dhcp_config.cfg ";
  }
}
```

2. Define the conditions in class section:

```
class "OPT66_67" { # for option 66/67
# option 124
    match if option vendor-class-identifier = "Level1";
# option 55
    option dhcp-parameter-request-list 1,66,67;
# option 66
    option tftp-server-name "192.168.1.1";
# option 67
    option bootfile-name "dhcp_config.cfg";
}

shared-network Sample2 {
subnet 192.168.1.0 netmask 255.255.255.0 {
    }
    pool {
        allow members of "OPT66_67";
        range 192.168.1.10 192.168.1.20;
    }
}
```

Example

In the following example enables dhcp dynamic provisioning.

```
Console(config)#ip dhcp dynamic provisioning
Console(config)#
```

ip dhcp client class-id

This command specifies the DCHP client vendor class identifier for the current interface. Use the **no** form to remove the class identifier from the DHCP packet.

Syntax

ip dhcp client class-id [**text** *text* | **hex** *hex*]

no ip dhcp client class-id

text - A text string. (Range: 1-32 characters)

hex - A hexadecimal value. (Range: 1-64 characters)

Default Setting

Class identifier option enabled, using the model number as the string

Command Mode

Interface Configuration (VLAN)

Command Usage

- Use this command without any keyword to restore the default setting.

- This command is used to identify the vendor class and configuration of the switch to the DHCP server, which then uses this information to decide on how to service the client or the type of information to return.

- The general framework for this DHCP option is set out in RFC 2132 (Option 60). This information is used to convey configuration settings or other identification information about a client, but the specific string to use should be supplied by your service provider or network administrator. Options 60, 66 and 67 statements can be added to the server daemon's configuration file.

Table 128: Options 60, 66 and 67 Statements

Option	Statement	
	Keyword	**Parameter**
60	vendor-class-identifier	a string indicating the vendor class identifier
66	tftp-server-name	a string indicating the tftp server name
67	bootfile-name	a string indicating the bootfile name

- By default, DHCP option 66/67 parameters are not carried in a DHCP server reply. To ask for a DHCP reply with option 66/67 information, the DHCP client request sent by this switch includes a "parameter request list" asking for this information. Besides, the client request also includes a "vendor class identifier" set by the **ip dhcp client class-id** command that allows the DHCP server to identify the device, and select the appropriate configuration file for download. This information is included in Option 55 and 124.

Table 129: Options 55 and 124 Statements

Option	Statement	
	Keyword	**Parameter**
55	dhcp-parameter-request-list	a list of parameters, separated by ",'
124	vendor-class-identifier	a string indicating the vendor class identifier

- The server should reply with Option 66 attributes, including the TFTP server name and boot file name.

- Note that the vendor class identifier can be formatted in either text or hexadecimal using the **ip dhcp client class-id** command, but the format used by both the client and server must be the same.

Example

```
Console(config)#interface vlan 2
Console(config-if)#ip dhcp client class-id hex 0000e8666572
Console(config-if)#
```

Related Commands

ip dhcp restart client (633)

ip dhcp restart client

This command submits a BOOTP or DHCP client request.

Default Setting

None

Command Mode

Privileged Exec

Command Usage

- This command issues a BOOTP or DHCP client request for any IP interface that has been set to BOOTP or DHCP mode through the ip address command.
- DHCP requires the server to reassign the client's last address if available.
- If the BOOTP or DHCP server has been moved to a different domain, the network portion of the address provided to the client will be based on this new domain.

Example

In the following example, the device is reassigned the same address.

```
Console(config)#interface vlan 1
Console(config-if)#ip address dhcp
Console(config-if)#exit
Console#ip dhcp restart client
Console#show ip interface
VLAN 1 is Administrative Up - Link Up
  Address is 00-E0-00-00-00-01
  Index: 1001, MTU: 1500
  Address Mode is DHCP
  IP Address: 192.168.0.2 Mask: 255.255.255.0
  Proxy ARP is disabled
  DHCP Client Vendor Class ID (text): GEL-5261
  DHCP Relay Server:
Console#
```

Related Commands

ip address (642)

show ip dhcp dynamic-provision

This command shows the status of dynamic provision via DHCP.

Command Mode

Privileged Exec

Example

```
Console#show ip dhcp dynamic provisioning
Dynamic Provision via DHCP Status:   Disabled
Console#
```

DHCP for IPv6

ipv6 dhcp client rapid-commit vlan

This command specifies the Rapid Commit option for DHCPv6 message exchange for all DHCPv6 client requests submitted from the specified interface. Use the **no** form to disable this option.

Syntax

[**no**] **ipv6 dhcp client rapid-commit vlan** *vlan-id*

vlan-id - VLAN ID, specified as a single number, a range of consecutive numbers separated by a hyphen, or multiple numbers separated by commas. (Range: 1-4094; Maximum command length: 300 characters)

Default Setting

Disabled

Command Mode

Global Configuration

Command Usage

- DHCPv6 clients can obtain configuration parameters from a server through a normal four-message exchange (solicit, advertise, request, reply), or through a rapid two-message exchange (solicit, reply). The rapid-commit option must be enabled on both client and server for the two-message exchange to be used.
- This command allows two-message exchange method for prefix delegation. When enabled, DCHPv6 client requests submitted from the specified interface will include the rapid commit option in all solicit messages.
- If the rapid commit option has been enabled on the switch with this command, and on the DHCPv6 server, message exchange can be reduced from the normal four step process to a two-step exchange of only solicit and reply messages.

Example

```
Console(config)#ipv6 dhcp client rapid-commit vlan 2
Console(config)#
```

ipv6 dhcp restart client vlan

This command submits a DHCPv6 client request.

Syntax

ipv6 dhcp restart client vlan *vlan-id*

vlan-id - VLAN ID, specified as a single number, a range of consecutive numbers separated by a hyphen, or multiple numbers separated by commas. (Range: 1-4094; Maximum command length: 300 characters)

Default Setting
None

Command Mode
Privileged Exec

Command Usage

- This command starts the DHCPv6 client process if it is not yet running by submitting requests for configuration information through the specified interface(s). When DHCPv6 is restarted, the switch may attempt to acquire an IP address prefix through stateful address auto-configuration. If the router advertisements have the "other stateful configuration" flag set, the switch may also attempt to acquire other non-address configuration information (such as a default gateway or DNS server) when DHCPv6 is restarted.

  Prior to submitting a client request to a DHCPv6 server, the switch should be configured with a link-local address using the ipv6 address autoconfig command. The state of the Managed Address Configuration flag (M flag) and Other Stateful Configuration flag (O flag) received in Router Advertisement messages will determine the information this switch should attempt to acquire from the DHCPv6 server as described below.

  - Both M and O flags are set to 1:

    DHCPv6 is used for both address and other configuration settings.

    This combination is known as DHCPv6 stateful, in which a DHCPv6 server assigns stateful addresses to IPv6 hosts.

  - The M flag is set to 0, and the O flag is set to 1:

    DHCPv6 is used only for other configuration settings.

    Neighboring routers are configured to advertise non-link-local address prefixes from which IPv6 hosts derive stateless addresses.

    This combination is known as DHCPv6 stateless, in which a DHCPv6 server does not assign stateful addresses to IPv6 hosts, but does assign stateless configuration settings.

- DHCPv6 clients build a list of servers by sending a solicit message and collecting advertised message replies. These servers are then ranked based on their advertised preference value. If the client needs to acquire prefixes from servers, only servers that have advertised prefixes are considered.

- If the rapid commit option has been enabled on the switch using the ipv6 dhcp client rapid-commit vlan command, and on the DHCPv6 server, message exchange can be reduced from the normal four step process to a two-step exchange of only solicit and reply messages.

Example

The following command submits a client request on VLAN 1.

```
Console#ipv6 dhcp restart client vlan 1
Console#
```

Related Commands

ipv6 address autoconfig (655)

show ipv6 dhcp duid

This command shows the DHCP Unique Identifier for this switch.

Command Mode

Privileged Exec

Command Usage

DHCPv6 clients and servers are identified by a DHCP Unique Identifier (DUID) included in the client identifier and server identifier options. Static or dynamic address prefixes may be assigned by a DHCPv6 server based on the client's DUID.

Example

```
Console#show ipv6 dhcp duid
DHCPv6 Unique Identifier (DUID): 0001-0001-4A8158B4-00E00C0000FD
Console#
```

show ipv6 dhcp vlan

This command shows DHCPv6 information for the specified interface(s).

Syntax

show ipv6 dhcp vlan *vlan-list*

vlan-list - VLAN ID, specified as a single number, a range of consecutive numbers separated by a hyphen, or multiple numbers separated by commas. (Range: 1-4094; Maximum command length: 300 characters)

Command Usage

Each allocation in the DHCPv6 server is identified by a DUID and an IAID. IAID means Interface Association Identifier, and is a binding between the interface and one or more IP addresses.

Command Mode

Privileged Exec

Example

```
Console#show ipv6 dhcp vlan 1
VLAN 1 is in DHCP client mode, Rapid-Commit
  IAID:                           C0000F0
```

```
List of known servers:
  Server address : FE80::250:FCFF:FEF9:A494
  DUID           : 0001-0001-48CFB0D5-F48F2A006801

  Server address : FE80::250:FCFF:FEF9:A405
  DUID           : 0001-0001-38CF5AB0-F48F2A003917
Console#
```

Related Commands

ipv6 address (654)

DHCP Relay

This section describes commands used to configure the switch to relay DHCP requests from local hosts to a remote DHCP server.

Table 130: DHCP Relay Option 82 Commands

Command	Function	Mode
DHCP Relay for IPv4		
ip dhcp relay server	Specifies DHCP server or relay server addresses	IC
ip dhcp restart relay	Enables DHCP relay agent	PE

ip dhcp relay server

This command specifies the DHCP server or relay server addresses to use. Use the **no** form to clear all addresses.

Syntax

ip dhcp relay server *address1* [*address2* [*address3* ...]]

no ip dhcp relay server

address - IP address of DHCP server. (Range: 1-5 addresses)

Default Setting

None

Command Mode

Interface Configuration (VLAN)

Usage Guidelines

- DHCP relay service applies to DHCP client requests received on the specified VLAN.
- This command is used to configure DHCP relay for host devices attached to the switch. If DHCP relay service is enabled, and this switch sees a DHCP client request, it inserts its own IP address into the request so that the DHCP server will know the subnet where the client is located. Then, the switch forwards the

packet to a DHCP server on another network. When the server receives the DHCP request, it allocates a free IP address for the DHCP client from its defined scope for the DHCP client's subnet, and sends a DHCP response back to the DHCP relay agent (i.e., this switch). This switch then passes the DHCP response received from the server to the client.

- You must specify the IP address for at least one active DHCP server. Otherwise, the switch's DHCP relay agent will not be able to forward client requests to a DHCP server. Up to five DHCP servers can be specified in order of preference.

  If any of the specified DHCP server addresses are not located in the same network segment with this switch, use the ip default-gateway or ipv6 default-gateway command to specify the default router through which this switch can reach other IP subnetworks.

- To start DHCP relay service, enter the ip dhcp restart relay command.

Example

```
Console(config)#interface vlan 1
Console(config-if)#ip dhcp relay server 192.168.10.19
Console(config-if)#
```

Related Commands

ip dhcp restart relay (638)

ip dhcp restart relay

This command enables DHCP relay for the specified VLAN. Use the **no** form to disable it.

Default Setting

Disabled

Command Mode

Privileged Exec

Command Usage

This command is used to configure DHCP relay functions for host devices attached to the switch. If DHCP relay service is enabled, and this switch sees a DHCP request broadcast, it inserts its own IP address into the request so the DHCP server will know the subnet where the client is located. Then, the switch forwards the packet to the DHCP server on another network. When the server receives the DHCP request, it allocates a free IP address for the DHCP client from its defined scope for the DHCP client's subnet, and sends a DHCP response back to the DHCP relay agent (i.e., this switch). This switch then broadcasts the DHCP response received from the server to the client.

Example

In the following example, the device is reassigned the same address.

```
Console#ip dhcp restart relay
Console#show ip interface
VLAN 1 is Administrative Up - Link Up
  Address is 00-00-E8-93-82-A0
  Index: 1001, MTU: 1500
  Address Mode is DHCP
  IP Address: 10.1.0.254 Mask: 255.255.255.0
  Proxy ARP is disabled
  DHCP Client Vendor Class ID (text): GEL-5261
  DHCP Relay Server:
Console#
```

Related Commands

ip dhcp relay server (637)

26 IP Interface Commands

An IP Version 4 and Version 6 address may be used for management access to the switch over the network. Both IPv4 or IPv6 addresses can be used simultaneously to access the switch. You can manually configure a specific IPv4 or IPv6 address or direct the switch to obtain an IPv4 address from a BOOTP or DHCP server when it is powered on. An IPv6 address can either be manually configured or dynamically generated.

An IPv4 address for this switch is obtained via DHCP by default for VLAN 1. You may also need to a establish an IPv4 or IPv6 default gateway between this device and management stations that exist on another network segment.

Table 131: IP Interface Commands

Command Group	Function
IPv4 Interface	Configures an IPv4 address for the switch
IPv6 Interface	Configures an IPv6 address for the switch

IPv4 Interface

There are no IP addresses assigned to this switch by default. You must manually configure a new address to manage the switch over your network or to connect the switch to existing IP subnets. You may also need to a establish a default gateway between this device and management stations or other devices that exist on another network segment (if routing is not enabled).

This section includes commands for configuring IP interfaces, the Address Resolution Protocol (ARP) and Proxy ARP.

Table 132: IPv4 Interface Commands

Command Group	Function
Basic IPv4 Configuration	Configures the IP address for interfaces and the gateway router
ARP Configuration	Configures static, dynamic and proxy ARP service

Basic IPv4 Configuration

This section describes commands used to configure IP addresses for VLAN interfaces on the switch.

Table 133: Basic IP Configuration Commands

Command	Function	Mode
ip address	Sets the IP address for the current interface	IC
ip default-gateway	Defines the default gateway through which this switch can reach other subnetworks	GC
show ip default-gateway	Displays the default gateway configured for this device	PE
show ip interface	Displays the IP settings for this device	PE
show ip traffic	Displays statistics for IP, ICMP, UDP, TCP and ARP protocols	PE
traceroute	Shows the route packets take to the specified host	PE
ping	Sends ICMP echo request packets to another node on the network	NE, PE

ip address

This command sets the IPv4 address for the currently selected VLAN interface. Use the **no** form to remove an IP address.

Syntax

ip address {*ip-address netmask* [**secondary**] [**default-gateway** *ip-address*] | **bootp** | **dhcp**}

no ip address [*ip-address netmask* [**secondary**] | **dhcp**]

ip-address - IP address

netmask - Network mask for the associated IP subnet. This mask identifies the host address bits used for routing to specific subnets. The network mask can be either in the traditional format xxx.xxx.xxx.xxx or use classless format with the range /5 to /32. For example the subnet 255.255.224.0 would be /19.

secondary - Specifies a secondary IP address.

default-gateway - The default gateway. (Refer to the ip default-gateway command which provides the same function.)

bootp - Obtains IP address from BOOTP.

dhcp - Obtains IP address from DHCP.

Default Setting

192.168.2.10/24

Command Mode

Interface Configuration (VLAN)

Command Usage

- An IP address must be assigned to this device to gain management access over the network or to connect the router to existing IP subnets. A specific IP address can be manually configured, or the router can be directed to obtain an address from a BOOTP or DHCP server. Valid IP addresses consist of four numbers, 0 to 255, separated by periods. Anything other than this format is not be accepted by the configuration program.

- An interface can have only one primary IP address, but can have many secondary IP addresses. In other words, secondary addresses need to be specified if more than one IP subnet can be accessed through this interface. Note that a secondary address cannot be configured prior to setting the primary IP address, and the primary address cannot be removed if a secondary address is still present. Also, if any router/switch in a network segment uses a secondary address, all other routers/switches in that segment must also use a secondary address from the same network or subnet address space.

- If **bootp** or **dhcp** options are selected, the system will immediately start broadcasting service requests for all VLANs configured to obtain address assignments through BOOTP or DHCP. IP is enabled but will not function until a BOOTP or DHCP reply has been received. Requests are broadcast periodically by the router in an effort to learn its IP address. (BOOTP and DHCP values can include the IP address, default gateway, and subnet mask). If the DHCP/BOOTP server is slow to respond, you may need to use the ip dhcp restart client command to re-start broadcasting service requests, or reboot the switch.

Note: Each VLAN group can be assigned its own IP interface address. You can manage the switch via any of these IP addresses.

Example

In the following example, the device is assigned an address in VLAN 1.

```
Console(config)#interface vlan 1
Console(config-if)#ip address 192.168.1.5 255.255.255.0
Console(config-if)#
```

This example assigns an IP address to VLAN 2 using a classless network mask.

```
Console(config)#interface vlan 2
Console(config-if)#ip address 10.2.2.1/24
Console(config-if)#
```

Related Commands

ip dhcp restart client (633)
ip default-gateway (644)
ipv6 address (654)

ip default-gateway

This command specifies the default gateway for destinations not found in local routing tables. Use the **no** form to remove a default gateway.

Syntax

ip default-gateway *gateway*

no ip default-gateway

gateway - IP address of the default gateway

Default Setting

No default gateway is established.

Command Mode

Global Configuration

Command Usage

- The default gateway can also be defined using the following Global configuration command: **ip route 0.0.0.0 0.0.0.0** *gateway-address*.
- Static routes can also be defined using the ip route command to ensure that traffic to the designated address or subnet passes through a preferred gateway.
- A default gateway can only be successfully set when a network interface that directly connects to the gateway has been configured on the router.
- The same link-local address may be used by different interfaces/nodes in different zones (RFC 4007). Therefore, when specifying a link-local address for a default gateway, include zone-id information indicating the VLAN identifier after the % delimiter. For example, FE80::7272%1 identifies VLAN 1 as the interface.

Example

The following example defines a default gateway for this device:

```
Console(config)#ip default-gateway 192.168.0.1
Console(config)#
```

Related Commands

ip address (642)
ip route (680)
ipv6 default-gateway (653)

show ip default-gateway

This command shows the IPv4 default gateway configured for this device.

Default Setting

None

Command Mode

Privileged Exec

Example

```
Console#show ip default-gateway
IP default gateway 10.1.0.254
Console#
```

Related Commands

ip default-gateway (644)
show ipv6 default-gateway (662)

show ip interface

This command displays the settings of an IPv4 interface.

Command Mode

Privileged Exec

Example

```
Console#show ip interface
VLAN 1 is Administrative Up - Link Up
  Address is CC-37-AB-A1-06-C0
  Index: 1001, MTU: 1500
  Address Mode is DHCP
  IP Address: 192.168.2.14 Mask: 255.255.255.0
  Proxy ARP is disabled
  DHCP Client Vendor Class ID (text): GEL-5261
  DHCP Relay Server:
Console#
```

Related Commands

ip address (642)
show ipv6 interface (662)

show ip traffic

This command displays statistics for IP, ICMP, UDP, TCP and ARP protocols.

Command Mode

Privileged Exec

Example

```
Console#show ip traffic
IP Statistics:
IP received
                7845 total received
                     header errors
                     unknown protocols
                     address errors
                     discards
                7845 delivers
                     reassembly request datagrams
                     reassembly succeeded
                     reassembly failed
IP sent
                     forwards datagrams
                9903 requests
                     discards
                     no routes
                     generated fragments
                     fragment succeeded
                     fragment failed
ICMP Statistics:
ICMP received
                     input
                     errors
                     destination unreachable messages
                     time exceeded messages
                     parameter problem message
                     echo request messages
                     echo reply messages
                     redirect messages
                     timestamp request messages
                     timestamp reply messages
                     source quench messages
                     address mask request messages
                     address mask reply messages
ICMP sent
                     output
                     errors
                     destination unreachable messages
                     time exceeded messages
                     parameter problem message
                     echo request messages
                     echo reply messages
                     redirect messages
                     timestamp request messages
                     timestamp reply messages
                     source quench messages
                     address mask request messages
                     address mask reply messages
UDP Statistics:
                     input
                     no port errors
                     other errors
                     output
TCP Statistics:
                7841 input
```

```
                    input errors
                9897 output
Console#
```

traceroute

This command shows the route packets take to the specified destination.

Syntax

traceroute *host*

host - IP address or alias of the host.

Default Setting

None

Command Mode

Privileged Exec

Command Usage

- Use the **traceroute** command to determine the path taken to reach a specified destination.
- A trace terminates when the destination responds, when the maximum timeout (TTL) is exceeded, or the maximum number of hops is exceeded.
- The traceroute command first sends probe datagrams with the TTL value set at one. This causes the first router to discard the datagram and return an error message. The trace function then sends several probe messages at each subsequent TTL level and displays the round-trip time for each message. Not all devices respond correctly to probes by returning an “ICMP port unreachable” message. If the timer goes off before a response is returned, the trace function prints a series of asterisks and the “Request Timed Out” message. A long sequence of these messages, terminating only when the maximum timeout has been reached, may indicate this problem with the target device.
- If the target device does not respond or other errors are detected, the switch will indicate this by one of the following messages:
  - * - No Response
  - H - Host Unreachable
  - N - Network Unreachable
  - P - Protocol Unreachable
  - O -Other

Example

```
Console#traceroute 192.168.0.1
Press "ESC" to abort.
Traceroute to 192.168.0.99, 30 hops max, timeout is 3 seconds
Hop Packet 1 Packet 2 Packet 3 IP Address
--- -------- -------- -------- ---------------
  1    20 ms   <10 ms   <10 ms 192.168.0.99

Trace completed.
Console#
```

ping

This command sends (IPv4) ICMP echo request packets to another node on the network.

Syntax

ping *host* [**count** *count*] [**size** *size*]

host - IP address or alias of the host.

count - Number of packets to send. (Range: 1-16)

size - Number of bytes in a packet. (Range: 32-512)
The actual packet size will be eight bytes larger than the size specified because the switch adds header information.

Default Setting

count: 5
size: 32 bytes

Command Mode

Normal Exec, Privileged Exec

Command Usage

- Use the ping command to see if another site on the network can be reached.
- The following are some results of the **ping** command:
  - *Normal response* - The normal response occurs in one to ten seconds, depending on network traffic.
  - *Destination does not respond* - If the host does not respond, a “timeout” appears in ten seconds.
  - *Destination unreachable* - The gateway for this destination indicates that the destination is unreachable.
  - *Network or host unreachable* - The gateway found no corresponding entry in the route table.

- When pinging a host name, be sure the DNS server has been defined (page 623) and host name-to-address translation enabled (page 621). If necessary, local devices can also be specified in the DNS static host table (page 622).

Example

```
Console#ping 10.1.0.9
Press ESC to abort.
PING to 10.1.0.9, by 5 32-byte payload ICMP packets, timeout is 5 seconds
response time: 10 ms
response time: 10 ms
response time: 10 ms
response time: 10 ms
response time: 0 ms
Ping statistics for 10.1.0.9:
 5 packets transmitted, 5 packets received (100%), 0 packets lost (0%)
Approximate round trip times:
 Minimum = 0 ms, Maximum = 10 ms, Average = 8 ms
Console#
```

Related Commands

interface (350)

ARP Configuration

This section describes commands used to configure the Address Resolution Protocol (ARP) on the switch.

Table 134: Address Resolution Protocol Commands

Command	Function	Mode
arp	Adds a static entry in the ARP cache	GC
ip proxy-arp	Enables proxy ARP service	IC
clear arp-cache	Deletes all dynamic entries from the ARP cache	PE
show arp	Displays entries in the ARP cache	NE, PE

arp

This command adds a static entry in the Address Resolution Protocol (ARP) cache. Use the **no** form to remove an entry from the cache.

Syntax

arp *ip-address hardware-address*

no arp *ip-address*

ip-address - IP address to map to a specified hardware address.

hardware-address - Hardware address to map to a specified IP address. (The format for this address is xx-xx-xx-xx-xx-xx.)

Default Setting

No default entries

Command Mode
Global Configuration

Command Usage
- The ARP cache is used to map 32-bit IP addresses into 48-bit hardware (i.e., Media Access Control) addresses. This cache includes entries for hosts and other routers on local network interfaces defined on this router.
- The maximum number of static entries allowed in the ARP cache is 128.
- A static entry may need to be used if there is no response to an ARP broadcast message. For example, some applications may not respond to ARP requests or the response arrives too late, causing network operations to time out.
- Static entries will not be aged out nor deleted when power is reset. A static entry can only be removed through the configuration interface.

Example
```
Console(config)#arp 10.1.0.19 01-02-03-04-05-06
Console(config)#
```

Related Commands
clear arp-cache (651)
show arp (651)

ip proxy-arp

This command enables proxy Address Resolution Protocol (ARP). Use the **no** form to disable proxy ARP.

Syntax
[**no**] **ip proxy-arp**

Default Setting
Disabled

Command Mode
Interface Configuration (VLAN)

Command Usage
- Proxy ARP allows a non-routing device to determine the MAC address of a host on another subnet or network.
- End stations that require Proxy ARP must view the entire network as a single network. These nodes must therefore use a smaller subnet mask than that used by the router or other relevant network devices.

- Extensive use of Proxy ARP can degrade router performance because it may lead to increased ARP traffic and increased search time for larger ARP address tables.

Example

```
Console(config)#interface vlan 3
Console(config-if)#ip proxy-arp
Console(config-if)#
```

clear arp-cache

This command deletes all dynamic entries from the Address Resolution Protocol (ARP) cache.

Command Mode

Privileged Exec

Example

This example clears all dynamic entries in the ARP cache.

```
Console#clear arp-cache
This operation will delete all the dynamic entries in ARP Cache.
Do you want to continue this operation (y/n)?
Console#
```

show arp

This command displays entries in the Address Resolution Protocol (ARP) cache.

Command Mode

Normal Exec, Privileged Exec

Command Usage

- This command displays information about the ARP cache. The first line shows the cache timeout. It also shows each cache entry, including the IP address, MAC address, type (static, dynamic, other), and VLAN interface. Note that entry type “other” indicates local addresses for this router.

- Static entries are only displayed for VLANs that are up. In other words, static entries are only displayed when configured for the IP subnet of a existing VLAN, and that VLAN is linked up.

Example

This example displays all entries in the ARP cache.

```
Console#show arp
ARP Cache Timeout: 1200 (seconds)

IP Address      MAC Address       Type      Interface
--------------- ----------------- --------- -----------
10.1.0.0        FF-FF-FF-FF-FF-FF other     VLAN1
10.1.0.254      00-00-AB-CD-00-00 other     VLAN1
10.1.0.255      FF-FF-FF-FF-FF-FF other     VLAN1
145.30.20.23    09-50-40-30-20-10 dynamic   VLAN3

Total entry : 4
Console#
```

IPv6 Interface

This switch supports the following IPv6 interface commands.

Table 135: IPv6 Configuration Commands

Command	Function	Mode
Interface Address Configuration and Utilities		
ipv6 default-gateway	Sets an IPv6 default gateway for traffic with no known next hop	GC
ipv6 address	Configures an IPv6 global unicast address, and enables IPv6 on an interface	IC
ipv6 address autoconfig	Enables automatic configuration of IPv6 addresses on an interface and enables IPv6 on the interface	IC
ipv6 address eui-64	Configures an IPv6 global unicast address for an interface using an EUI-64 interface ID in the low order 64 bits, and enables IPv6 on the interface	IC
ipv6 address link-local	Configures an IPv6 link-local address for an interface and enables IPv6 on the interface	IC
ipv6 enable	Enables IPv6 on an interface that has not been configured with an explicit IPv6 address	IC
ipv6 mtu	Sets the size of the maximum transmission unit (MTU) for IPv6 packets sent on an interface	IC
show ipv6 default-gateway	Displays the current IPv6 default gateway	PE
show ipv6 interface	Displays the usability and configured settings for IPv6 interfaces	PE
show ipv6 mtu	Displays maximum transmission unit (MTU) information for IPv6 interfaces	PE
show ipv6 traffic	Displays statistics about IPv6 traffic	PE
clear ipv6 traffic	Resets IPv6 traffic counters	PE
ping6	Sends IPv6 ICMP echo request packets to another node on the network	PE

Table 135: IPv6 Configuration Commands (Continued)

Command	Function	Mode
traceroute6	Shows the route packets take to the specified host	PE
Neighbor Discovery		
ipv6 nd dad attempts	Configures the number of consecutive neighbor solicitation messages sent on an interface during duplicate address detection	IC
ipv6 nd ns-interval	Configures the interval between IPv6 neighbor solicitation retransmissions on an interface	IC
ipv6 nd reachable-time	Configures the amount of time that a remote IPv6 node is considered reachable after some reachability confirmation event has occurred	IC
clear ipv6 neighbors	Deletes all dynamic entries in the IPv6 neighbor discovery cache	PE
show ipv6 neighbors	Displays information in the IPv6 neighbor discovery cache	PE

Interface Address Configuration and Utilities

ipv6 default-gateway

This command sets an IPv6 default gateway to use for destinations with no known next hop. Use the **no** form to remove a previously configured default gateway.

Syntax

ipv6 default-gateway *ipv6-address*

no ipv6 address

ipv6-address - The IPv6 address of the default next hop router to use for destinations with no known next hop.

Default Setting

No default gateway is defined

Command Mode

Global Configuration

Command Usage

- All IPv6 addresses must be according to RFC 2373 "IPv6 Addressing Architecture," using 8 colon-separated 16-bit hexadecimal values. One double colon may be used in the address to indicate the appropriate number of zeros required to fill the undefined fields.
- The same link-local address may be used by different interfaces/nodes in different zones (RFC 4007). Therefore, when specifying a link-local address, include zone-id information indicating the VLAN identifier after the % delimiter. For example, FE80::7272%1 identifies VLAN 1 as the interface.
- An IPv6 default gateway should be defined if the destination has been assigned an IPv6 address that is located in a different IP segment.

- An IPv6 default gateway can only be successfully set when a network interface that directly connects to the gateway has been configured on the switch.

Example

The following example defines a default gateway for this device:

```
Console(config)#ipv6 default-gateway FE80::269:3EF9:FE19:6780%1
Console(config)#
```

Related Commands

show ipv6 default-gateway (662)
ip default-gateway (644)

ipv6 address

This command configures an IPv6 global unicast address and enables IPv6 on an interface. Use the **no** form without any arguments to remove all IPv6 addresses from the interface, or use the **no** form with a specific IPv6 address to remove that address from the interface.

Syntax

[**no**] **ipv6 address** *ipv6-address*[/*prefix-length*]

ipv6-address - A full IPv6 address including the network prefix and host address bits.

prefix-length - A decimal value indicating how many contiguous bits (from the left) of the address comprise the prefix (i.e., the network portion of the address).

Default Setting

No IPv6 addresses are defined

Command Mode

Interface Configuration (VLAN)

Command Usage

- All IPv6 addresses must be according to RFC 2373 "IPv6 Addressing Architecture," using 8 colon-separated 16-bit hexadecimal values. One double colon may be used in the address to indicate the appropriate number of zeros required to fill the undefined fields.

- To connect to a larger network with multiple subnets, you must configure a global unicast address. This address can be manually configured with this command, or it can be automatically configured using the ipv6 address autoconfig command.

- If a link-local address has not yet been assigned to this interface, this command will assign the specified static global unicast address and also dynamically generate a link-local unicast address for the interface. (The link-local address is

made with an address prefix of FE80 and a host portion based the switch's MAC address in modified EUI-64 format.)

- If a duplicate address is detected, a warning message is sent to the console.

Example

This example specifies a full IPv6 address and prefix length.

```
Console(config)#interface vlan 1
Console(config-if)#ipv6 address 2001:DB8:2222:7272::72/96
Console(config-if)#end
Console#show ipv6 interface
VLAN 1 is up
IPv6 is enabled
Link-local address:
  fe80::7272:cfff:fe83:3466%1/64
Global unicast address(es):
  2001:db8:2222:7272::72/96, subnet is 2001:db8:2222:7272::/96
Joined group address(es):
ff02::1:ff00:72
ff02::1:ff83:3466
ff02::1
IPv6 link MTU is 1500 bytes
ND DAD is enabled, number of DAD attempts: 3.
ND retransmit interval is 1000 milliseconds
ND advertised retransmit interval is 0 milliseconds
ND reachable time is 30000 milliseconds
ND advertised reachable time is 0 milliseconds
ND advertised router lifetime is 1800 seconds

Console#
```

Related Commands

ipv6 address eui-64 (657)
ipv6 address autoconfig (655)
show ipv6 interface (662)
ip address (642)

ipv6 address autoconfig

This command enables stateless autoconfiguration of IPv6 addresses on an interface and enables IPv6 on the interface. The network portion of the address is based on prefixes received in IPv6 router advertisement messages; the host portion is based on the modified EUI-64 form of the interface identifier (i.e., the switch's MAC address). Use the **no** form to remove the address generated by this command.

Syntax

[**no**] **ipv6 address autoconfig**

Default Setting

No IPv6 addresses are defined

Command Mode

Interface Configuration (VLAN)

Command Usage

- If a link local address has not yet been assigned to this interface, this command will dynamically generate a global unicast address (if a global prefix is included in received router advertisements) and a link local address for the interface. (The link-local address is made with an address prefix of FE80 and a host portion based the switch's MAC address in modified EUI-64 format.)
- If a duplicate address is detected, a warning message is sent to the console.
- When DHCPv6 is restarted, the switch may attempt to acquire an IP address prefix through stateful address autoconfiguration. If the router advertisements have the "other stateful configuration" flag set, the switch may also attempt to acquire other non-address configuration information (such as a default gateway) from a DHCPv6 server when DHCPv6 is restarted.

Example

This example assigns a dynamic global unicast address of to the switch.

```
Console(config-if)#ipv6 address autoconfig
Console(config-if)#end
Console#show ipv6 interface
VLAN 1 is up
IPv6 is stale
Link-local address:
  fe80::7272:cfff:fe83:3466%1/64
Global unicast address(es):
  2001:db8:2222:7272:7272:cfff:fe83:3466/64, subnet is 2001:db8:2222:7272::/
  64
    valid lifetime 2591531 preferred lifetime 604331
Joined group address(es):
ff02::1:ff83:3466
ff02::1
IPv6 link MTU is 1500 bytes
ND DAD is enabled, number of DAD attempts: 3.
ND retransmit interval is 1000 milliseconds
ND advertised retransmit interval is 0 milliseconds
ND reachable time is 30000 milliseconds
ND advertised reachable time is 0 milliseconds
ND advertised router lifetime is 1800 seconds

Console#
```

Related Commands

ipv6 address (654)
show ipv6 interface (662)

ipv6 address eui-64

This command configures an IPv6 address for an interface using an EUI-64 interface ID in the low order 64 bits and enables IPv6 on the interface. Use the **no** form without any arguments to remove all manually configured IPv6 addresses from the interface. Use the **no** form with a specific address to remove it from the interface.

Syntax

ipv6 address *ipv6-prefix/prefix-length* **eui-64**

no ipv6 address [*ipv6-prefix/prefix-length* **eui-64**]

ipv6-prefix - The IPv6 network portion of the address assigned to the interface.

prefix-length - A decimal value indicating how many contiguous bits (from the left) of the address comprise the prefix (i.e., the network portion of the address).

Default Setting

No IPv6 addresses are defined

Command Mode

Interface Configuration (VLAN)

Command Usage

- The prefix must be formatted according to RFC 2373 "IPv6 Addressing Architecture," using 8 colon-separated 16-bit hexadecimal values. One double colon may be used in the address to indicate the appropriate number of zeros required to fill the undefined fields.

- If a link local address has not yet been assigned to this interface, this command will dynamically generate a global unicast address and a link-local address for this interface. (The link-local address is made with an address prefix of FE80 and a host portion based the switch's MAC address in modified EUI-64 format.)

- Note that the value specified in the ipv6-prefix may include some of the high-order host bits if the specified prefix length is less than 64 bits. If the specified prefix length exceeds 64 bits, then the network portion of the address will take precedence over the interface identifier.

- If a duplicate address is detected, a warning message is sent to the console.

- IPv6 addresses are 16 bytes long, of which the bottom 8 bytes typically form a unique host identifier based on the device's MAC address. The EUI-64 specification is designed for devices that use an extended 8-byte MAC address. For devices that still use a 6-byte MAC address (also known as EUI-48 format), it must be converted into EUI-64 format by inverting the universal/local bit in the address and inserting the hexadecimal number FFFE between the upper and lower three bytes of the MAC address.

- For example, if a device had an EUI-48 address of 28-9F-18-1C-82-35, the global/local bit must first be inverted to meet EUI-64 requirements (i.e., 1 for

globally defined addresses and 0 for locally defined addresses), changing 28 to 2A. Then the two bytes FFFE are inserted between the OUI (i.e., company id) and the rest of the address, resulting in a modified EUI-64 interface identifier of 2A-9F-18-FF-FE-1C-82-35.

- This host addressing method allows the same interface identifier to be used on multiple IP interfaces of a single device, as long as those interfaces are attached to different subnets.

Example

This example uses the network prefix of 2001:0DB8:0:1::/64, and specifies that the EUI-64 interface identifier be used in the lower 64 bits of the address.

```
Console(config)#interface vlan 1
Console(config-if)#ipv6 address 2001:0DB8:0:1::/64 eui-64
Console(config-if)#end
Console#show ipv6 interface
VLAN 1 is up
IPv6 is enabled
Link-local address:
  fe80::7272:cfff:fe83:3466%1/64
Global unicast address(es):
  2001:db8:0:1:7272:cfff:fe83:3466/64, subnet is 2001:db8:0:1::/64[EUI]
  2001:db8:2222:7272::72/96, subnet is 2001:db8:2222:7272::/96
Joined group address(es):
ff02::1:ff00:72
ff02::1:ff83:3466
ff02::1
IPv6 link MTU is 1500 bytes
ND DAD is enabled, number of DAD attempts: 3.
ND retransmit interval is 1000 milliseconds
ND advertised retransmit interval is 0 milliseconds
ND reachable time is 30000 milliseconds
ND advertised reachable time is 0 milliseconds
ND advertised router lifetime is 1800 seconds

Console#
```

Related Commands

ipv6 address autoconfig (655)
show ipv6 interface (662)

ipv6 address link-local

This command configures an IPv6 link-local address for an interface and enables IPv6 on the interface. Use the **no** form without any arguments to remove all manually configured IPv6 addresses from the interface. Use the **no** form with a specific address to remove it from the interface.

Syntax

ipv6 address *ipv6-address* **link-local**

no ipv6 address [*ipv6-address* **link-local**]

ipv6-address - The IPv6 address assigned to the interface.

Default Setting

No IPv6 addresses are defined

Command Mode

Interface Configuration (VLAN)

Command Usage

- The specified address must be formatted according to RFC 2373 "IPv6 Addressing Architecture," using 8 colon-separated 16-bit hexadecimal values. One double colon may be used in the address to indicate the appropriate number of zeros required to fill the undefined fields. And the address prefix must be in the range of FE80~FEBF.
- The address specified with this command replaces a link-local address that was automatically generated for the interface.
- You can configure multiple IPv6 global unicast addresses per interface, but only one link-local address per interface.
- If a duplicate address is detected, a warning message is sent to the console.

Example

This example assigns a link-local address of FE80::269:3EF9:FE19:6779 to VLAN 1. Note that a prefix in the range of FE80~FEBF is required for link-local addresses, and the first 16-bit group in the host address is padded with a zero in the form 0269.

```
Console(config)#interface vlan 1
Console(config-if)#ipv6 address FE80::269:3EF9:FE19:6779 link-local
Console(config-if)#end
Console#show ipv6 interface
VLAN 1 is up
IPv6 is enabled
Link-local address:
  fe80::269:3ef9:fe19:6779%1/64
Global unicast address(es):
  2001:db8:0:1:7272:cfff:fe83:3466/64, subnet is 2001:db8:0:1::/64[EUI]
  2001:db8:2222:7272::72/96, subnet is 2001:db8:2222:7272::/96
Joined group address(es):
ff02::1:ff19:6779
ff02::1:ff00:72
ff02::1:ff83:3466
```

```
ff02::1
IPv6 link MTU is 1500 bytes
ND DAD is enabled, number of DAD attempts: 3.
ND retransmit interval is 1000 milliseconds
ND advertised retransmit interval is 0 milliseconds
ND reachable time is 30000 milliseconds
ND advertised reachable time is 0 milliseconds
ND advertised router lifetime is 1800 seconds

Console#
```

Related Commands

ipv6 enable (660)
show ipv6 interface (662)

ipv6 enable

This command enables IPv6 on an interface that has not been configured with an explicit IPv6 address. Use the **no** form to disable IPv6 on an interface that has not been configured with an explicit IPv6 address.

Syntax

[**no**] **ipv6 enable**

Default Setting

IPv6 is disabled

Command Mode

Interface Configuration (VLAN)

Command Usage

- This command enables IPv6 on the current VLAN interface and automatically generates a link-local unicast address. The address prefix uses FE80, and the host portion of the address is generated by converting the switch's MAC address to modified EUI-64 format (see page 657). This address type makes the switch accessible over IPv6 for all devices attached to the same local subnet.
- If a duplicate address is detected on the local segment, this interface will be disabled and a warning message displayed on the console.
- The **no ipv6 enable** command does not disable IPv6 for an interface that has been explicitly configured with an IPv6 address.

Example

In this example, IPv6 is enabled on VLAN 1, and the link-local address FE80::2E0:CFF:FE00:FD/64 is automatically generated by the switch.

```
Console(config)#interface vlan 1
Console(config-if)#ipv6 enable
Console(config-if)#end
Console#show ipv6 interface
VLAN 1 is up
```

```
IPv6 is enabled
Link-local address:
  fe80::269:3ef9:fe19:6779%1/64
Global unicast address(es):
(None)
Joined group address(es):
ff02::1:ffa1:6c0
ff02::1:2
ff02::1
IPv6 link MTU is 1500 bytes
ND DAD is enabled, number of DAD attempts: 3.
ND retransmit interval is 1000 milliseconds
ND advertised retransmit interval is 0 milliseconds
ND reachable time is 30000 milliseconds
ND advertised reachable time is 0 milliseconds
ND advertised router lifetime is 1800 seconds

Console#
```

Related Commands

ipv6 address link-local (659)
show ipv6 interface (662)

ipv6 mtu

This command sets the size of the maximum transmission unit (MTU) for IPv6 packets sent on an interface. Use the **no** form to restore the default setting.

Syntax

ipv6 mtu *size*

no ipv6 mtu

size - Specifies the MTU size. (Range: 1280-65535 bytes)

Default Setting

1500 bytes

Command Mode

Interface Configuration (VLAN)

Command Usage

- If a non-default value is configured, an MTU option is included in the router advertisements sent from this device.
- The maximum value set by this command cannot exceed the MTU of the physical interface, which is currently fixed at 1500 bytes.
- IPv6 routers do not fragment IPv6 packets forwarded from other routers. However, traffic originating from an end-station connected to an IPv6 router may be fragmented.
- All devices on the same physical medium must use the same MTU in order to operate correctly.

- IPv6 must be enabled on an interface before the MTU can be set.

Example

The following example sets the MTU for VLAN 1 to 1280 bytes:

```
Console(config)#interface vlan 1
Console(config-if)#ipv6 mtu 1280
Console(config-if)#
```

Related Commands

show ipv6 mtu (665)
jumbo frame (99)

show ipv6 default-gateway

This command displays the current IPv6 default gateway.

Command Mode

Normal Exec, Privileged Exec

Example

The following shows the default gateway configured for this device:

```
Console#show ipv6 default-gateway
IPv6 default gateway 2001:DB8:2222:7272::254

Console#
```

show ipv6 interface

This command displays the usability and configured settings for IPv6 interfaces.

Syntax

show ipv6 interface [**brief** [**vlan** *vlan-id* [*ipv6-prefix*/*prefix-length*]]]

brief - Displays a brief summary of IPv6 operational status and the addresses configured for each interface.

vlan-id - VLAN ID (Range: 1-4093)

ipv6-prefix - The IPv6 network portion of the address assigned to the interface. The prefix must be formatted according to RFC 2373 "IPv6 Addressing Architecture," using 8 colon-separated 16-bit hexadecimal values. One double colon may be used in the address to indicate the appropriate number of zeros required to fill the undefined fields.

prefix-length - A decimal value indicating how many of the contiguous bits (from the left) of the address comprise the prefix (i.e., the network portion of the address).

Command Mode

Privileged Exec

Example

This example displays all the IPv6 addresses configured for the switch.

```
Console#show ipv6 interface
VLAN 1 is up
IPv6 is enabled
Link-local address:
  fe80::269:3ef9:fe19:6779%1/64
Global unicast address(es):
  2001:db8:0:1:7272:cfff:fe83:3466/64, subnet is 2001:db8:0:1::/64[EUI]
  2001:db8:2222:7272::72/96, subnet is 2001:db8:2222:7272::/96
Joined group address(es):
ff02::1:ff19:6779
ff02::1:ff00:72
ff02::1:ff83:3466
ff02::1
IPv6 link MTU is 1500 bytes
ND DAD is enabled, number of DAD attempts: 3.
ND retransmit interval is 1000 milliseconds
ND advertised retransmit interval is 0 milliseconds
ND reachable time is 30000 milliseconds
ND advertised reachable time is 0 milliseconds
ND advertised router lifetime is 1800 seconds

Console#
```

Table 136: show ipv6 interface - display description

Field	Description
VLAN	A VLAN is marked “up” if the switch can send and receive packets on this interface, “down” if a line signal is not present, or “administratively down” if the interface has been disabled by the administrator.
IPv6	IPv6 is marked “enable” if the switch can send and receive IP traffic on this interface, “disable” if the switch cannot send and receive IP traffic on this interface, or “stalled” if a duplicate link-local address is detected on the interface.
Link-local address	Shows the link-local address assigned to this interface
Global unicast address(es)	Shows the global unicast address(es) assigned to this interface

Table 136: show ipv6 interface - display description (Continued)

Field	Description
Joined group address(es)	In addition to the unicast addresses assigned to an interface, a node is required to join the all-nodes multicast addresses FF01::1 and FF02::1 for all IPv6 nodes within scope 1 (interface-local) and scope 2 (link-local), respectively. FF01::1/16 is the transient interface-local multicast address for all attached IPv6 nodes, and FF02::1/16 is the link-local multicast address for all attached IPv6 nodes. The interface-local multicast address is only used for loopback transmission of multicast traffic. Link-local multicast addresses cover the same types as used by link-local unicast addresses, including all nodes (FF02::1), all routers (FF02::2), and solicited nodes (FF02::1:FFXX:XXXX) as described below. A node is also required to compute and join the associated solicited-node multicast addresses for every unicast and anycast address it is assigned. IPv6 addresses that differ only in the high-order bits, e.g. due to multiple high-order prefixes associated with different aggregations, will map to the same solicited-node address, thereby reducing the number of multicast addresses a node must join. In this example, FF02::1:FF90:0/104 is the solicited-node multicast address which is formed by taking the low-order 24 bits of the address and appending those bits to the prefix.
ND DAD	Indicates whether (neighbor discovery) duplicate address detection is enabled.
number of DAD attempts	The number of consecutive neighbor solicitation messages sent on the interface during duplicate address detection.
ND retransmit interval	The interval between IPv6 neighbor solicitation retransmissions sent on an interface during duplicate address detection.
ND advertised retransmit interval	The retransmit interval is included in all router advertisements sent out of an interface so that nodes on the same link use the same time value.
ND reachable time	The amount of time a remote IPv6 node is considered reachable after a reachability confirmation event has occurred
ND advertised reachable time	The reachable time is included in all router advertisements sent out of an interface so that nodes on the same link use the same time value.
ND advertised router lifetime	The length of time during which the prefix is valid for on-link determination.

This example displays a brief summary of IPv6 addresses configured on the switch.

```
Console#show ipv6 interface brief
Interface       VLAN       IPv6       IPv6 Address
--------------- ---------- ---------- ------------------------------------
VLAN 1          Up         Up         2001:DB8:2222:7273::72/96
VLAN 1          Up         Up         FE80::2E0:CFF:FE00:FD%1/64
Console#
```

Related Commands

show ip interface (645)

show ipv6 mtu

This command displays the maximum transmission unit (MTU) cache for destinations that have returned an ICMP packet-too-big message along with an acceptable MTU to this switch.

Command Mode

Normal Exec, Privileged Exec

Example

The following example shows the MTU cache for this device:

```
Console#show ipv6 mtu
MTU     Since   Destination Address
1400    00:04:21  5000:1::3
1280    00:04:50  FE80::203:A0FF:FED6:141D
Console#
```

Table 137: show ipv6 mtu - display description*

Field	Description
MTU	Adjusted MTU contained in the ICMP packet-too-big message returned from this destination, and now used for all traffic sent along this path.
Since	Time since an ICMP packet-too-big message was received from this destination.
Destination Address	Address which sent an ICMP packet-too-big message.

* No information is displayed if an IPv6 address has not been assigned to the switch.

show ipv6 traffic

This command displays statistics about IPv6 traffic passing through this switch.

Command Mode

Privileged Exec

Example

The following example shows statistics for all IPv6 unicast and multicast traffic, as well as ICMP, UDP and TCP statistics:

```
Console#show ipv6 traffic
IPv6 Statistics:
IPv6 received
                    3 total received
                      header errors
                      too big errors
                      no routes
                      address errors
                      unknown protocols
                      truncated packets
                      discards
                      delivers
                      reassembly request datagrams
                      reassembly succeeded
                      reassembly failed
```

```
IPv6 sent
                    forwards datagrams
                  6 requests
                    discards
                    no routes
                    generated fragments
                    fragment succeeded
                    fragment failed
ICMPv6 Statistics:
ICMPv6 received
                    input
                    errors
                    destination unreachable messages
                    packet too big messages
                    time exceeded messages
                    parameter problem message
                    echo request messages
                    echo reply messages
                    router solicit messages
                    router advertisement messages
                    neighbor solicit messages
                    neighbor advertisement messages
                    redirect messages
                    group membership query messages
                    group membership response messages
                    group membership reduction messages
ICMPv6 sent
                  6 output
                    destination unreachable messages
                    packet too big messages
                    time exceeded messages
                    parameter problem message
                    echo request messages
                    echo reply messages
                  3 router solicit messages
                    router advertisement messages
                  3 neighbor solicit messages
                    neighbor advertisement messages
                    redirect messages
                    group membership query messages
                    group membership response messages
                    group membership reduction messages
UDP Statistics:
                    input
                    no port errors
                    other errors
                    output
Console#
```

Table 138: show ipv6 traffic - display description

Field	Description
IPv6 Statistics	
IPv6 received	
total received	The total number of input datagrams received by the interface, including those received in error.
header errors	The number of input datagrams discarded due to errors in their IPv6 headers, including version number mismatch, other format errors, hop count exceeded, IPv6 options, etc.

Table 138: show ipv6 traffic - display description (Continued)

Field	Description
too big errors	The number of input datagrams that could not be forwarded because their size exceeded the link MTU of outgoing interface.
no routes	The number of input datagrams discarded because no route could be found to transmit them to their destination.
address errors	The number of input datagrams discarded because the IPv6 address in their IPv6 header's destination field was not a valid address to be received at this entity. This count includes invalid addresses (e.g., ::0) and unsupported addresses (e.g., addresses with unallocated prefixes). For entities which are not IPv6 routers and therefore do not forward datagrams, this counter includes datagrams discarded because the destination address was not a local address.
unknown protocols	The number of locally-addressed datagrams received successfully but discarded because of an unknown or unsupported protocol. This counter is incremented at the interface to which these datagrams were addressed which might not be necessarily the input interface for some of the datagrams.
truncated packets	The number of input datagrams discarded because datagram frame didn't carry enough data.
discards	The number of input IPv6 datagrams for which no problems were encountered to prevent their continued processing, but which were discarded (e.g., for lack of buffer space). Note that this counter does not include any datagrams discarded while awaiting re-assembly.
delivers	The total number of datagrams successfully delivered to IPv6 user-protocols (including ICMP). This counter is incremented at the interface to which these datagrams were addressed which might not be necessarily the input interface for some of the datagrams.
reassembly request datagrams	The number of IPv6 fragments received which needed to be reassembled at this interface. Note that this counter is incremented at the interface to which these fragments were addressed which might not be necessarily the input interface for some of the fragments.
reassembly succeeded	The number of IPv6 datagrams successfully reassembled. Note that this counter is incremented at the interface to which these datagrams were addressed which might not be necessarily the input interface for some of the fragments.
reassembly failed	The number of failures detected by the IPv6 re-assembly algorithm (for whatever reason: timed out, errors, etc.). Note that this is not necessarily a count of discarded IPv6 fragments since some algorithms (notably the algorithm in RFC 815) can lose track of the number of fragments by combining them as they are received. This counter is incremented at the interface to which these fragments were addressed which might not be necessarily the input interface for some of the fragments.
IPv6 sent	
forwards datagrams	The number of output datagrams which this entity received and forwarded to their final destinations. In entities which do not act as IPv6 routers, this counter will include only those packets which were Source-Routed via this entity, and the Source-Route processing was successful. Note that for a successfully forwarded datagram the counter of the outgoing interface is incremented.
requests	The total number of IPv6 datagrams which local IPv6 user-protocols (including ICMP) supplied to IPv6 in requests for transmission. Note that this counter does not include any datagrams counted in ipv6IfStatsOutForwDatagrams.

Table 138: show ipv6 traffic - display description (Continued)

Field	Description
discards	The number of output IPv6 datagrams for which no problem was encountered to prevent their transmission to their destination, but which were discarded (e.g., for lack of buffer space). Note that this counter would include datagrams counted in ipv6IfStatsOutForwDatagrams if any such packets met this (discretionary) discard criterion.
no routes	The number of input datagrams discarded because no route could be found to transmit them to their destination.
generated fragments	The number of output datagram fragments that have been generated as a result of fragmentation at this output interface.
fragment succeeded	The number of IPv6 datagrams that have been successfully fragmented at this output interface.
fragment failed	The number of IPv6 datagrams that have been discarded because they needed to be fragmented at this output interface but could not be.
ICMPv6 Statistics	
ICMPv6 received	
input	The total number of ICMP messages received by the interface which includes all those counted by ipv6IfIcmpInErrors. Note that this interface is the interface to which the ICMP messages were addressed which may not be necessarily the input interface for the messages.
errors	The number of ICMP messages which the interface received but determined as having ICMP-specific errors (bad ICMP checksums, bad length, etc.).
destination unreachable messages	The number of ICMP Destination Unreachable messages received by the interface.
packet too big messages	The number of ICMP Packet Too Big messages received by the interface.
time exceeded messages	The number of ICMP Time Exceeded messages received by the interface.
parameter problem message	The number of ICMP Parameter Problem messages received by the interface.
echo request messages	The number of ICMP Echo (request) messages received by the interface.
echo reply messages	The number of ICMP Echo Reply messages received by the interface.
router solicit messages	The number of ICMP Router Solicit messages received by the interface.
router advertisement messages	The number of ICMP Router Advertisement messages received by the interface.
neighbor solicit messages	The number of ICMP Neighbor Solicit messages received by the interface.
neighbor advertisement messages	The number of ICMP Neighbor Advertisement messages received by the interface.
redirect messages	The number of Redirect messages received by the interface.
group membership query messages	The number of ICMPv6 Group Membership Query messages received by the interface.
group membership response messages	The number of ICMPv6 Group Membership Response messages received by the interface.
group membership reduction messages	The number of ICMPv6 Group Membership Reduction messages received by the interface.

Table 138: show ipv6 traffic - display description (Continued)

Field	Description
multicast listener discovery version 2 reports	The number of MLDv2 reports received by the interface.
ICMPv6 sent	
output	The total number of ICMP messages which this interface attempted to send. Note that this counter includes all those counted by icmpOutErrors.
destination unreachable messages	The number of ICMP Destination Unreachable messages sent by the interface.
packet too big messages	The number of ICMP Packet Too Big messages sent by the interface.
time exceeded messages	The number of ICMP Time Exceeded messages sent by the interface.
parameter problem message	The number of ICMP Parameter Problem messages sent by the interface.
echo request messages	The number of ICMP Echo (request) messages sent by the interface.
echo reply messages	The number of ICMP Echo Reply messages sent by the interface.
router solicit messages	The number of ICMP Router Solicitation messages sent by the interface.
router advertisement messages	The number of ICMP Router Advertisement messages sent by the interface.
neighbor solicit messages	The number of ICMP Neighbor Solicit messages sent by the interface.
neighbor advertisement messages	The number of ICMP Router Advertisement messages sent by the interface.
redirect messages	The number of Redirect messages sent. For a host, this object will always be zero, since hosts do not send redirects.
group membership query messages	The number of ICMPv6 Group Membership Query messages sent by the interface.
group membership response messages	The number of ICMPv6 Group Membership Response messages sent.
group membership reduction messages	The number of ICMPv6 Group Membership Reduction messages sent.
multicast listener discovery version 2 reports	The number of MLDv2 reports sent by the interface.
UDP Statistics	
input	The total number of UDP datagrams delivered to UDP users.
no port errors	The total number of received UDP datagrams for which there was no application at the destination port.
other errors	The number of received UDP datagrams that could not be delivered for reasons other than the lack of an application at the destination port.
output	The total number of UDP datagrams sent from this entity.

clear ipv6 traffic

This command resets IPv6 traffic counters.

Command Mode

Privileged Exec

Command Usage

This command resets all of the counters displayed by the show ipv6 traffic command.

Example

```
Console#clear ipv6 traffic
Console#
```

ping6

This command sends (IPv6) ICMP echo request packets to another node on the network.

Syntax

ping6 {*ipv6-address* | *host-name*} [**count** *count*] [**size** *size*]

ipv6-address - The IPv6 address of a neighbor device. You can specify either a link-local or global unicast address formatted according to RFC 2373 "IPv6 Addressing Architecture," using 8 colon-separated 16-bit hexadecimal values. One double colon may be used in the address to indicate the appropriate number of zeros required to fill the undefined fields.

host-name - A host name string which can be resolved into an IPv6 address through a domain name server.

count - Number of packets to send. (Range: 1-16)

size - Number of bytes in a packet. (Range: 0-1500 bytes)
The actual packet size will be eight bytes larger than the size specified because the router adds header information.

Default Setting

count: 5
size: 32 bytes

Command Mode

Privileged Exec

Command Usage

- Use the **ping6** command to see if another site on the network can be reached, or to evaluate delays over the path.
- The same link-local address may be used by different interfaces/nodes in different zones (RFC 4007). Therefore, when specifying a link-local address, include zone-id information indicating the VLAN identifier after the % delimiter.

For example, FE80::7272%1 identifies VLAN 1 as the interface from which the ping is sent.

- When pinging a host name, be sure the DNS server has been enabled (see page 621). If necessary, local devices can also be specified in the DNS static host table (see page 622).

- When using ping6 with a host name, the switch first attempts to resolve the alias into an IPv6 address before trying to resolve it into an IPv4 address.

Example

```
Console#ping6 FE80::2E0:CFF:FE00:FC%1
Press ESC to abort.
PING to FE80::2E0:CFF:FE00:FC%1/64, by 5 32-byte payload ICMP packets,
  timeout is 3 seconds
response time: 20 ms    [FE80::2E0:CFF:FE00:FC] seq_no: 1
response time: 0 ms     [FE80::2E0:CFF:FE00:FC] seq_no: 2
response time: 0 ms     [FE80::2E0:CFF:FE00:FC] seq_no: 3
response time: 0 ms     [FE80::2E0:CFF:FE00:FC] seq_no: 4
response time: 0 ms     [FE80::2E0:CFF:FE00:FC] seq_no: 5
Ping statistics for FE80::2E0:CFF:FE00:FC%1/64:
 5 packets transmitted, 5 packets received (100%), 0 packets lost (0%)
Approximate round trip times:
 Minimum = 0 ms, Maximum = 20 ms, Average = 4 ms
Console#
```

traceroute6

This command shows the route packets take to the specified destination.

Syntax

traceroute6 {*ipv6-address* | *host-name*} [**max-failures** *failure-count*]

ipv6-address - The IPv6 address of a neighbor device. You can specify either a link-local or global unicast address formatted according to RFC 2373 “IPv6 Addressing Architecture,” using 8 colon-separated 16-bit hexadecimal values. One double colon may be used in the address to indicate the appropriate number of zeros required to fill the undefined fields.

host-name - A host name string which can be resolved into an IPv6 address through a domain name server.

failure-count - The maximum number of failures before which the trace route is terminated. (Range: 1-255)

Default Setting

Maximum failures: 5

Command Mode

Privileged Exec

Command Usage

- Use the **traceroute6** command to determine the path taken to reach a specified destination.

- The same link-local address may be used by different interfaces/nodes in different zones (RFC 4007). Therefore, when specifying a link-local address, include zone-id information indicating the VLAN identifier after the % delimiter. For example, FE80::7272%1 identifies VLAN 1 as the interface from which the ping is sent.

- A trace terminates when the destination responds, when the maximum timeout (TTL) is exceeded, or the maximum number of hops is exceeded.

- The traceroute command first sends probe datagrams with the TTL value set at one. This causes the first router to discard the datagram and return an error message. The trace function then sends several probe messages at each subsequent TTL level and displays the round-trip time for each message. Not all devices respond correctly to probes by returning an “ICMP port unreachable” message. If the timer goes off before a response is returned, the trace function prints a series of asterisks and the “Request Timed Out” message. A long sequence of these messages, terminating only when the maximum timeout has been reached, may indicate this problem with the target device.

Example

```
Console#traceroute6 FE80::2E0:CFF:FE9C:CA10%1
Press "ESC" to abort.

Traceroute to FE80::2E0:CFF:FE9C:CA10%1/64, 30 hops max, timeout is 3
  seconds, 5 max failure(s) before termination.

Hop Packet 1 Packet 2 Packet 3 IPv6 Address
--- -------- -------- -------- -------------------------------------------
  1   <10 ms   <10 ms   <10 ms FE80::2E0:CFF:FE9C:CA10%1/64

Trace completed.
Console#
```

Neighbor Discovery

ipv6 nd dad attempts

This command configures the number of consecutive neighbor solicitation messages sent on an interface during duplicate address detection. Use the **no** form to restore the default setting.

Syntax

ipv6 nd dad attempts *count*

no ipv6 nd dad attempts

count - The number of neighbor solicitation messages sent to determine whether or not a duplicate address exists on this interface. (Range: 0-600)

Default Setting

3

Command Mode

Interface Configuration (VLAN)

Command Usage

- Configuring a value of 0 disables duplicate address detection.
- Duplicate address detection determines if a new unicast IPv6 address already exists on the network before it is assigned to an interface.
- Duplicate address detection is stopped on any interface that has been suspended (see the vlan command). While an interface is suspended, all unicast IPv6 addresses assigned to that interface are placed in a “pending” state. Duplicate address detection is automatically restarted when the interface is administratively re-activated.
- An interface that is re-activated restarts duplicate address detection for all unicast IPv6 addresses on the interface. While duplicate address detection is performed on the interface’s link-local address, the other IPv6 addresses remain in a “tentative” state. If no duplicate link-local address is found, duplicate address detection is started for the remaining IPv6 addresses.
- If a duplicate address is detected, it is set to “duplicate” state, and a warning message is sent to the console. If a duplicate link-local address is detected, IPv6 processes are disabled on the interface. If a duplicate global unicast address is detected, it is not used. All configuration commands associated with a duplicate address remain configured while the address is in “duplicate” state.
- If the link-local address for an interface is changed, duplicate address detection is performed on the new link-local address, but not for any of the IPv6 global unicast addresses already associated with the interface.

Example

The following configures five neighbor solicitation attempts for addresses configured on VLAN 1. The show ipv6 interface command indicates that the duplicate address detection process is still on-going.

```
Console(config)#interface vlan 1
Console(config-if)#ipv6 nd dad attempts 5
Console(config-if)#end
Console#show ipv6 interface
VLAN 1 is up
IPv6 is enabled
Link-local address:
  fe80::200:e8ff:fe90:0/64
Global unicast address(es):
  2009:db9:2229::79, subnet is 2009:db9:2229:0::/64
Joined group address(es):
  ff01::1/16
  ff02::1/16
  ff02::1:ff00:79/104
  ff02::1:ff90:0/104
IPv6 link MTU is 1500 bytes.
ND DAD is enabled, number of DAD attempts: 5.
ND retransmit interval is 1000 milliseconds
ND advertised retransmit interval is 0 milliseconds
ND reachable time is 30000 milliseconds
ND advertised reachable time is 0 milliseconds
ND advertised router lifetime is 1800 seconds
Console#
```

Related Commands

ipv6 nd ns-interval (674)
show ipv6 neighbors (677)

ipv6 nd ns-interval

This command configures the interval between transmitting IPv6 neighbor solicitation messages on an interface. Use the **no** form to restore the default value.

Syntax

ipv6 nd ns-interval *milliseconds*

no ipv6 nd ns-interval

milliseconds - The interval between transmitting IPv6 neighbor solicitation messages. (Range: 1000-3600000)

Default Setting

1000 milliseconds is used for neighbor discovery operations
0 milliseconds is advertised in router advertisements

Command Mode

Interface Configuration (VLAN)

Command Usage

- When a non-default value is configured, the specified interval is used both for router advertisements and by the router itself.
- This command specifies the interval between transmitting neighbor solicitation messages when resolving an address, or when probing the reachability of a neighbor. Therefore, avoid using very short intervals for normal IPv6 operations.
- Setting the neighbor solicitation interval to 0 means that the configured time is unspecified by this router.

Example

The following sets the interval between sending neighbor solicitation messages to 30000 milliseconds:

```
Console(config)#interface vlan 1
Console(config)#ipv6 nd ns-interval 30000
Console(config)#end
Console#show ipv6 interface
VLAN 1 is up
IPv6 is enabled
Link-local address:
  fe80::200:e8ff:FE90:0/64
Global unicast address(es):
  2009:db9:2229::79, subnet is 2009:db9:2229:0::/64
Joined group address(es):
  ff01::1/16
  ff02::1/16
  ff02::1:ff00:79/104
  ff02::1:ff90:0/104
IPv6 link MTU is 1500 bytes.
ND DAD is enabled, number of DAD attempts: 5.
ND retransmit interval is 1000 milliseconds
ND advertised retransmit interval is 0 milliseconds
ND reachable time is 30000 milliseconds
ND advertised reachable time is 0 milliseconds
ND advertised router lifetime is 1800 seconds
Console#
```

Related Commands

show running-config (92)

ipv6 nd reachable-time

This command configures the amount of time that a remote IPv6 node is considered reachable after some reachability confirmation event has occurred. Use the **no** form to restore the default setting.

Syntax

ipv6 nd reachable-time *milliseconds*

no ipv6 nd reachable-time

milliseconds - The time that a node can be considered reachable after receiving confirmation of reachability. (Range: 0-3600000)

Default Setting

30000 milliseconds is used for neighbor discovery operations
0 milliseconds is advertised in router advertisements

Command Mode

Interface Configuration (VLAN)

Command Usage

- The time limit configured by this parameter allows the router to detect unavailable neighbors. During the neighbor discover process, an IPv6 node will multicast neighbor solicitation messages to search for neighbor nodes. For a neighbor node to be considered reachable, it must respond to the neighbor soliciting node with a neighbor advertisement message to become a confirmed neighbor, after which the reachable timer will be considered in effect for subsequent unicast IPv6 layer communications.

- This time limit is included in all router advertisements sent out through an interface, ensuring that nodes on the same link use the same time value.

- Setting the time limit to 0 means that the configured time is unspecified by this router.

Example

The following sets the reachable time for a remote node to 1000 milliseconds:

```
Console(config)#interface vlan 1
Console(config)#ipv6 nd reachable-time 1000
Console(config)#
```

clear ipv6 neighbors

This command deletes all dynamic entries in the IPv6 neighbor discovery cache.

Command Mode

Privileged Exec

Example

The following deletes all dynamic entries in the IPv6 neighbor cache:

```
Console#clear ipv6 neighbors
Console#
```

show ipv6 neighbors

This command displays information in the IPv6 neighbor discovery cache.

Syntax

show ipv6 neighbors [**vlan** *vlan-id* | *ipv6-address*]

vlan-id - VLAN ID (Range: 1-4094)

ipv6-address - The IPv6 address of a neighbor device. You can specify either a link-local or global unicast address formatted according to RFC 2373 "IPv6 Addressing Architecture," using 8 colon-separated 16-bit hexadecimal values. One double colon may be used in the address to indicate the appropriate number of zeros required to fill the undefined fields.

Default Setting

All IPv6 neighbor discovery cache entries are displayed.

Command Mode

Privileged Exec

Example

The following shows all known IPv6 neighbors for this switch:

```
Console#show ipv6 neighbors
State: I1 - Incomplete, I2 - Invalid, R - Reachable, S - Stale, D - Delay,
       P1 - Probe, P2 - Permanent, U - Unknown
IPv6 Address                            Age  Link-layer Addr   State Interface
--------------------------------------- ---- ----------------- ----- ---------
FE80::2E0:CFF:FE9C:CA10                 4    00-E0-0C-9C-CA-10 R     1
Console#
```

Table 139: show ipv6 neighbors - display description

Field	Description
IPv6 Address	IPv6 address of neighbor
Age	The time since the address was verified as reachable (in seconds). A static entry is indicated by the value "Permanent."

Table 139: show ipv6 neighbors - display description (Continued)

Field	Description
Link-layer Addr	Physical layer MAC address.
State	The following states are used for dynamic entries: I1 (Incomplete) - Address resolution is being carried out on the entry. A neighbor solicitation message has been sent to the multicast address of the target, but it has not yet returned a neighbor advertisement message. I2 (Invalid) - An invalidated mapping. Setting the state to invalid dis-associates the interface identified with this entry from the indicated mapping (RFC 4293). R (Reachable) - Positive confirmation was received within the last ReachableTime interval that the forward path to the neighbor was functioning. While in REACH state, the device takes no special action when sending packets. S (Stale) - More than the ReachableTime interval has elapsed since the last positive confirmation was received that the forward path was functioning. While in STALE state, the device takes no action until a packet is sent. D (Delay) - More than the ReachableTime interval has elapsed since the last positive confirmation was received that the forward path was functioning. A packet was sent within the last DELAY_FIRST_PROBE_TIME interval. If no reachability confirmation is received within this interval after entering the DELAY state, the switch will send a neighbor solicitation message and change the state to PROBE. P1 (Probe) - A reachability confirmation is actively sought by resending neighbor solicitation messages every RetransTimer interval until confirmation of reachability is received. U (Unknown) - Unknown state. The following states are used for static entries: I1 (Incomplete)-The interface for this entry is down. R (Reachable) - The interface for this entry is up. Reachability detection is not applied to static entries in the IPv6 neighbor discovery cache. P2 (Permanent) - Indicates a static entry.
VLAN	VLAN interface from which the address was reached.

Related Commands

show mac-address-table (416)

28 IP Routing Commands

After network interfaces are configured for the switch, the paths used to send traffic between different interfaces must be set. To forward traffic to devices on other subnetworks, configure fixed paths with static routing commands. This section includes commands for static routing. These commands are used to connect between different local subnetworks or to connect the router to the enterprise network.

Table 160: IP Routing Commands

Command Group	Function
Global Routing Configuration	Configures global parameters for static routing, displays the routing table

Global Routing Configuration

Table 161: Global Routing Configuration Commands

Command	Function	Mode
IPv4 Commands		
ip route	Configures static routes	GC
show ip route	Displays entries in the routing table	PE

IPv4 Commands

ip route

This command configures static routes. Use the **no** form to remove static routes.

Syntax

ip route *destination-ip netmask next-hop* [*distance*]

no ip route {*destination-ip netmask next-hop* | *****}

destination-ip – IP address of the destination network, subnetwork, or host.

netmask - Network mask for the associated IP subnet. This mask identifies the host address bits used for routing to specific subnets.

next-hop – IP address of the next hop router used for this route.

distance – An administrative distance indicating that this route can be overridden by dynamic routing information if the distance of the dynamic route is less than that configured for the static route. Note that the default administrative distance used by the dynamic unicast routing protocol is 120 for RIP. (Range: 1-255, Default: 1)

***** – Removes all static routing table entries.

Default Setting

No static routes are configured.

Command Mode

Global Configuration

Command Usage

- Up to 56 static routes can be configured.
- If an administrative distance is defined for a static route, and the same destination can be reached through a dynamic route at a lower administration distance, then the dynamic route will be used.

Example

This example forwards all traffic for subnet 192.168.1.0 to the gateway router 192.168.5.254, using the default metric of 1.

```
Console(config)#ip route 192.168.1.0 255.255.255.0 192.168.5.254
Console(config)#
```

show ip route

This command displays information in the Forwarding Information Base (FIB).

Syntax

show ip route [**connected** | **database** | **static** | **summary**]

connected – Displays all currently connected entries.

database – All known routes, including inactive routes.

static – Displays all static entries.

summary – Displays a brief list of summary information about entries in the routing table, including the maximum number of entries supported, the number of connected routes, the total number of routes currently stored in the routing table, and the number of entries in the FIB.

Command Mode

Privileged Exec

Command Usage

- The FIB contains information required to forward IP traffic. It contains the interface identifier and next hop information for each reachable destination network prefix based on the IP routing table. When routing or topology changes occur in the network, the routing table is updated, and those changes are immediately reflected in the FIB.

  The FIB is distinct from the routing table (or, Routing Information Base), which holds all routing information received from routing peers. The forwarding information base contains unique paths only. It does not contain any secondary paths. A FIB entry consists of the minimum amount of information necessary to make a forwarding decision on a particular packet. The typical components within a forwarding information base entry are a network prefix, a router port identifier, and next hop information.

- This command only displays routes which are currently accessible for forwarding. The router must be able to directly reach the next hop, so the VLAN interface associated with any static route entry must be up.

Example

```
Console#show ip route
Codes: C - connected, S - static, R - RIP, B - BGP
       O - OSPF, IA - OSPF inter area
       N1 - OSPF NSSA external type 1, N2 - OSPF NSSA external type 2
       E1 - OSPF external type 1, E2 - OSPF external type 2
      i - IS-IS, L1 - IS-IS level-1, L2 - IS-IS level-2, ia - IS-IS inter area
       * - candidate default

C       127.0.0.0/8 is directly connected, lo
C       192.168.1.0/24 is directly connected, VLAN1
Console#
```

The RIB contains all available routes learned through directly attached networks, and any additionally configured routes such as static routes. The RIB contains the set of all available routes from which optimal entries are selected for use by the Forwarding Information Base (see Command Usage under the show ip route command).

```
Console#show ip route database
Codes: C - connected, S - static, R - RIP, B - BGP
       O - OSPF, IA - OSPF inter area
       N1 - OSPF NSSA external type 1, N2 - OSPF NSSA external type 2
       E1 - OSPF external type 1, E2 - OSPF external type 2
      i - IS-IS, L1 - IS-IS level-1, L2 - IS-IS level-2, ia - IS-IS inter area
       > - selected route, * - FIB route, p - stale info

C    *> 127.0.0.0/8 is directly connected, lo0
C    *> 192.168.1.0/24 is directly connected, VLAN1

Console#
```

In the following example, the numeric identifier following the routing table name (0) indicates the Forwarding Information Base identifier.

```
Console#show ip route summary
IP routing table name is Default-IP-Routing-Table(0)
IP routing table maximum-paths is 1
Connected       2
Total           2
Console#
```

Section III

Appendices

This section provides additional information and includes these items:

- "Troubleshooting" on page 685
- "License Information" on page 687

A Troubleshooting

Problems Accessing the Management Interface

Table 162: Troubleshooting Chart

Symptom	Action
Cannot connect using Telnet, or SNMP software	◆ Be sure the switch is powered up. ◆ Check network cabling between the management station and the switch. Make sure the ends are properly connected and there is no damage to the cable. Test the cable if necessary. ◆ Check that you have a valid network connection to the switch and that the port you are using has not been disabled. ◆ Be sure you have configured the VLAN interface through which the management station is connected with a valid IP address, subnet mask and default gateway. ◆ Be sure the management station has an IP address in the same subnet as the switch's IP interface to which it is connected. ◆ If you are trying to connect to the switch via the IP address for a tagged VLAN group, your management station, and the ports connecting intermediate switches in the network, must be configured with the appropriate tag. ◆ If you cannot connect using Telnet, you may have exceeded the maximum number of concurrent Telnet/SSH sessions permitted. Try connecting again at a later time.
Cannot connect using Secure Shell	◆ If you cannot connect using SSH, you may have exceeded the maximum number of concurrent Telnet/SSH sessions permitted. Try connecting again at a later time. ◆ Be sure the control parameters for the SSH server are properly configured on the switch, and that the SSH client software is properly configured on the management station. ◆ Be sure you have generated both an RSA and DSA public key on the switch, exported this key to the SSH client, and enabled SSH service. Try using another SSH client or check for updates to your SSH client application. ◆ Be sure you have set up an account on the switch for each SSH user, including user name, authentication level, and password. ◆ Be sure you have imported the client's public key to the switch (if public key authentication is used).
Cannot access the on-board configuration program via a serial port connection	◆ Be sure you have set the terminal emulator program to VT100 compatible, 8 data bits, 1 stop bit, no parity, and the baud rate set to 115200 bps. ◆ Verify that you are using the RJ-45 to DB-9 null-modem serial cable supplied with the switch. If you use any other cable, be sure that it conforms to the pin-out connections provided in the Installation Guide.
Forgot or lost the password	◆ Contact your local distributor.

Using System Logs

If a fault does occur, refer to the Installation Guide to ensure that the problem you encountered is actually caused by the switch. If the problem appears to be caused by the switch, follow these steps:

1. Enable logging.
2. Set the error messages reported to include all categories.
3. Enable SNMP.
4. Enable SNMP traps.
5. Designate the SNMP host that is to receive the error messages.
6. Repeat the sequence of commands or other actions that lead up to the error.
7. Make a list of the commands or circumstances that led to the fault. Also make a list of any error messages displayed.
8. Set up your terminal emulation software so that it can capture all console output to a file. Then enter the "show tech-support" command to record all system settings in this file.
9. Contact your distributor's service engineer, and send a detailed description of the problem, along with the file used to record your system settings.

For example:

```
Console(config)#logging on
Console(config)#logging history flash 7
Console(config)#snmp-server host 192.168.1.23
⋮
```

B License Information

This product includes copyrighted third-party software subject to the terms of the GNU General Public License (GPL), GNU Lesser General Public License (LGPL), or other related free software licenses. The GPL code used in this product is distributed WITHOUT ANY WARRANTY and is subject to the copyrights of one or more authors. For details, refer to the section "The GNU General Public License" below, or refer to the applicable license as included in the source-code archive.

The GNU General Public License

GNU GENERAL PUBLIC LICENSE
Version 2, June 1991

Preamble

The licenses for most software are designed to take away your freedom to share and change it. By contrast, the GNU General Public License is intended to guarantee your freedom to share and change free software--to make sure the software is free for all its users. This General Public License applies to most of the Free Software Foundation's software and to any other program whose authors commit to using it. (Some other Free Software Foundation software is covered by the GNU Library General Public License instead.) You can apply it to your programs, too.

When we speak of free software, we are referring to freedom, not price. Our General Public Licenses are designed to make sure that you have the freedom to distribute copies of free software (and charge for this service if you wish), that you receive source code or can get it if you want it, that you can change the software or use pieces of it in new free programs; and that you know you can do these things.

To protect your rights, we need to make restrictions that forbid anyone to deny you these rights or to ask you to surrender the rights. These restrictions translate to certain responsibilities for you if you distribute copies of the software, or if you modify it.

For example, if you distribute copies of such a program, whether gratis or for a fee, you must give the recipients all the rights that you have. You must make sure that they, too, receive or can get the source code. And you must show them these terms so they know their rights.

We protect your rights with two steps: (1) copyright the software, and (2) offer you this license which gives you legal permission to copy, distribute and/or modify the software.

Also, for each author's protection and ours, we want to make certain that everyone understands that there is no warranty for this free software. If the software is modified by someone else and passed on, we want its recipients to know that what they have is not the original, so that any problems introduced by others will not reflect on the original authors' reputations.

Finally, any free program is threatened constantly by software patents. We wish to avoid the danger that redistributors of a free program will individually obtain patent licenses, in effect making the program proprietary. To prevent this, we have made it clear that any patent must be licensed for everyone's free use or not licensed at all.

The precise terms and conditions for copying, distribution and modification follow.

GNU GENERAL PUBLIC LICENSE TERMS AND CONDITIONS FOR COPYING, DISTRIBUTION AND MODIFICATION

1. This License applies to any program or other work which contains a notice placed by the copyright holder saying it may be distributed under the terms of this General Public License. The "Program", below, refers to any such program or work, and a "work based on the Program" means either the Program or any derivative work under copyright law: that is to say, a work containing the Program or a portion of it, either verbatim or with modifications and/or translated into another language. (Hereinafter, translation is included without limitation in the term "modification".) Each licensee is addressed as "you".

   Activities other than copying, distribution and modification are not covered by this License; they are outside its scope. The act of running the Program is not restricted, and the output from the Program is covered only if its contents constitute a work based on the Program (independent of having been made by running the Program). Whether that is true depends on what the Program does.

2. You may copy and distribute verbatim copies of the Program's source code as you receive it, in any medium, provided that you conspicuously and appropriately publish on each copy an appropriate copyright notice and disclaimer of warranty; keep intact all the notices that refer to this License and to the absence of any warranty; and give any other recipients of the Program a copy of this License along with the Program.

   You may charge a fee for the physical act of transferring a copy, and you may at your option offer warranty protection in exchange for a fee.

3. You may modify your copy or copies of the Program or any portion of it, thus forming a work based on the Program, and copy and distribute such modifications or work under the terms of Section 1 above, provided that you also meet all of these conditions:

   a) You must cause the modified files to carry prominent notices stating that you changed the files and the date of any change.

   b) You must cause any work that you distribute or publish, that in whole or in part contains or is derived from the Program or any part thereof, to be licensed as a whole at no charge to all third parties under the terms of this License.

   c) If the modified program normally reads commands interactively when run, you must cause it, when started running for such interactive use in the most ordinary way, to print or display an announcement including an appropriate copyright notice and a notice that there is no warranty (or else, saying that you provide a warranty) and that users may redistribute the program under these conditions, and telling the user how to view a copy of this License. (Exception: if the Program itself is interactive but does not normally print such an announcement, your work based on the Program is not required to print an announcement.)

   These requirements apply to the modified work as a whole. If identifiable sections of that work are not derived from the Program, and can be reasonably considered independent and separate works in themselves, then this License, and its terms, do not apply to those sections when you distribute them as separate works. But when you distribute the same sections as part of a whole which is a work based on the Program, the distribution of the whole must be on the terms of this License, whose permissions for other licensees extend to the entire whole, and thus to each and every part regardless of who wrote it.

   Thus, it is not the intent of this section to claim rights or contest your rights to work written entirely by you; rather, the intent is to exercise the right to control the distribution of derivative or collective works based on the Program.

   In addition, mere aggregation of another work not based on the Program with the Program (or with a work based on the Program) on a volume of a storage or distribution medium does not bring the other work under the scope of this License.

4. You may copy and distribute the Program (or a work based on it, under Section 2) in object code or executable form under the terms of Sections 1 and 2 above provided that you also do one of the following:

   a) Accompany it with the complete corresponding machine-readable source code, which must be distributed under the terms of Sections 1 and 2 above on a medium customarily used for software interchange; or,

b) Accompany it with a written offer, valid for at least three years, to give any third party, for a charge no more than your cost of physically performing source distribution, a complete machine-readable copy of the corresponding source code, to be distributed under the terms of Sections 1 and 2 above on a medium customarily used for software interchange; or,

c) Accompany it with the information you received as to the offer to distribute corresponding source code. (This alternative is allowed only for noncommercial distribution and only if you received the program in object code or executable form with such an offer, in accord with Subsection b above.)

The source code for a work means the preferred form of the work for making modifications to it. For an executable work, complete source code means all the source code for all modules it contains, plus any associated interface definition files, plus the scripts used to control compilation and installation of the executable. However, as a special exception, the source code distributed need not include anything that is normally distributed (in either source or binary form) with the major components (compiler, kernel, and so on) of the operating system on which the executable runs, unless that component itself accompanies the executable.

If distribution of executable or object code is made by offering access to copy from a designated place, then offering equivalent access to copy the source code from the same place counts as distribution of the source code, even though third parties are not compelled to copy the source along with the object code.

5. You may not copy, modify, sublicense, or distribute the Program except as expressly provided under this License. Any attempt otherwise to copy, modify, sublicense or distribute the Program is void, and will automatically terminate your rights under this License. However, parties who have received copies, or rights, from you under this License will not have their licenses terminated so long as such parties remain in full compliance.

6. You are not required to accept this License, since you have not signed it. However, nothing else grants you permission to modify or distribute the Program or its derivative works. These actions are prohibited by law if you do not accept this License. Therefore, by modifying or distributing the Program (or any work based on the Program), you indicate your acceptance of this License to do so, and all its terms and conditions for copying, distributing or modifying the Program or works based on it.

7. Each time you redistribute the Program (or any work based on the Program), the recipient automatically receives a license from the original licensor to copy, distribute or modify the Program subject to these terms and conditions. You may not impose any further restrictions on the recipients' exercise of the rights granted herein. You are not responsible for enforcing compliance by third parties to this License.

8. If, as a consequence of a court judgment or allegation of patent infringement or for any other reason (not limited to patent issues), conditions are imposed on you (whether by court order, agreement or otherwise) that contradict the conditions of this License, they do not excuse you from the conditions of this License. If you cannot distribute so as to satisfy simultaneously your obligations under this License and any other pertinent obligations, then as a consequence you may not distribute the Program at all. For example, if a patent license would not permit royalty-free redistribution of the Program by all those who receive copies directly or indirectly through you, then the only way you could satisfy both it and this License would be to refrain entirely from distribution of the Program.

   If any portion of this section is held invalid or unenforceable under any particular circumstance, the balance of the section is intended to apply and the section as a whole is intended to apply in other circumstances.

   It is not the purpose of this section to induce you to infringe any patents or other property right claims or to contest validity of any such claims; this section has the sole purpose of protecting the integrity of the free software distribution system, which is implemented by public license practices. Many people have made generous contributions to the wide range of software distributed through that system in reliance on consistent application of that system; it is up to the author/donor to decide if he or she is willing to distribute software through any other system and a licensee cannot impose that choice.

   This section is intended to make thoroughly clear what is believed to be a consequence of the rest of this License.

9. If the distribution and/or use of the Program is restricted in certain countries either by patents or by copyrighted interfaces, the original copyright holder who places the Program under this License may add an explicit geographical distribution limitation excluding those countries, so that distribution is permitted only in or among countries not thus excluded. In such case, this License incorporates the limitation as if written in the body of this License.

10. The Free Software Foundation may publish revised and/or new versions of the General Public License from time to time. Such new versions will be similar in spirit to the present version, but may differ in detail to address new problems or concerns.

    Each version is given a distinguishing version number. If the Program specifies a version number of this License which applies to it and "any later version", you have the option of following the terms and conditions either of that version or of any later version published by the Free Software Foundation. If the Program does not specify a version number of this License, you may choose any version ever published by the Free Software Foundation.

11. If you wish to incorporate parts of the Program into other free programs whose distribution conditions are different, write to the author to ask for permission. For software which is copyrighted by the Free Software Foundation, write to the Free Software Foundation; we sometimes make exceptions for this. Our decision will be guided by the two goals of preserving the free status of all derivatives of our free software and of promoting the sharing and reuse of software generally.

NO WARRANTY

1. BECAUSE THE PROGRAM IS LICENSED FREE OF CHARGE, THERE IS NO WARRANTY FOR THE PROGRAM, TO THE EXTENT PERMITTED BY APPLICABLE LAW. EXCEPT WHEN OTHERWISE STATED IN WRITING THE COPYRIGHT HOLDERS AND/OR OTHER PARTIES PROVIDE THE PROGRAM "AS IS" WITHOUT WARRANTY OF ANY KIND, EITHER EXPRESSED OR IMPLIED, INCLUDING, BUT NOT LIMITED TO, THE IMPLIED WARRANTIES OF MERCHANTABILITY AND FITNESS FOR A PARTICULAR PURPOSE. THE ENTIRE RISK AS TO THE QUALITY AND PERFORMANCE OF THE PROGRAM IS WITH YOU. SHOULD THE PROGRAM PROVE DEFECTIVE, YOU ASSUME THE COST OF ALL NECESSARY SERVICING, REPAIR OR CORRECTION.

2. IN NO EVENT UNLESS REQUIRED BY APPLICABLE LAW OR AGREED TO IN WRITING WILL ANY COPYRIGHT HOLDER, OR ANY OTHER PARTY WHO MAY MODIFY AND/OR REDISTRIBUTE THE PROGRAM AS PERMITTED ABOVE, BE LIABLE TO YOU FOR DAMAGES, INCLUDING ANY GENERAL, SPECIAL, INCIDENTAL OR CONSEQUENTIAL DAMAGES ARISING OUT OF THE USE OR INABILITY TO USE THE PROGRAM (INCLUDING BUT NOT LIMITED TO LOSS OF DATA OR DATA BEING RENDERED INACCURATE OR LOSSES SUSTAINED BY YOU OR THIRD PARTIES OR A FAILURE OF THE PROGRAM TO OPERATE WITH ANY OTHER PROGRAMS), EVEN IF SUCH HOLDER OR OTHER PARTY HAS BEEN ADVISED OF THE POSSIBILITY OF SUCH DAMAGES.

END OF TERMS AND CONDITIONS

Glossary

ACL Access Control List. ACLs can limit network traffic and restrict access to certain users or devices by checking each packet for certain IP or MAC (i.e., Layer 2) information.

ARP Address Resolution Protocol converts between IP addresses and MAC (hardware) addresses. ARP is used to locate the MAC address corresponding to a given IP address. This allows the switch to use IP addresses for routing decisions and the corresponding MAC addresses to forward packets from one hop to the next.

BOOTP Boot Protocol. BOOTP is used to provide bootup information for network devices, including IP address information, the address of the TFTP server that contains the devices system files, and the name of the boot file.

BGP Border Gateway Protocol is a protocol used to make core routing decisions on the Internet. It maintains a table of IP networks to register reachability among autonomous systems (AS). BGP makes routing decisions based on path, network policies and/or rule-sets.

CoS Class of Service is supported by prioritizing packets based on the required level of service, and then placing them in the appropriate output queue. Data is transmitted from the queues using weighted round-robin service to enforce priority service and prevent blockage of lower-level queues. Priority may be set according to the port default, the packet's priority bit (in the VLAN tag), TCP/UDP port number, IP Precedence bit, or DSCP priority bit.

DHCP Dynamic Host Control Protocol. Provides a framework for passing configuration information to hosts on a TCP/IP network. DHCP is based on the Bootstrap Protocol (BOOTP), adding the capability of automatic allocation of reusable network addresses and additional configuration options.

DHCP Option 82 A relay option for sending information about the requesting client (or an intermediate relay agent) in the DHCP request packets forwarded by the switch and in reply packets sent back from the DHCP server. This information can be used by DHCP servers to assign fixed IP addresses, or set other services or policies for clients.

DHCP Snooping A technique used to enhance network security by snooping on DHCP server messages to track the physical location of hosts, ensure that hosts only use the IP addresses assigned to them, and ensure that only authorized DHCP servers are accessible.

DiffServ Differentiated Services provides quality of service on large networks by employing a well-defined set of building blocks from which a variety of aggregate forwarding behaviors may be built. Each packet carries information (DS byte) used by each hop to give it a particular forwarding treatment, or per-hop behavior, at each network node. DiffServ allocates different levels of service to users on the network with mechanisms such as traffic meters, shapers/droppers, packet markers at the boundaries of the network.

DNS Domain Name Service. A system used for translating host names for network nodes into IP addresses.

DSCP Differentiated Services Code Point Service. DSCP uses a six-bit tag to provide for up to 64 different forwarding behaviors. Based on network policies, different kinds of traffic can be marked for different kinds of forwarding. The DSCP bits are mapped to the Class of Service categories, and then into the output queues.

EAPOL Extensible Authentication Protocol over LAN. EAPOL is a client authentication protocol used by this switch to verify the network access rights for any device that is plugged into the switch. A user name and password is requested by the switch, and then passed to an authentication server (e.g., RADIUS) for verification. EAPOL is implemented as part of the IEEE 802.1X Port Authentication standard.

EUI Extended Universal Identifier is an address format used by IPv6 to identify the host portion of the network address. The interface identifier in EUI compatible addresses is based on the link-layer (MAC) address of an interface. Interface identifiers used in global unicast and other IPv6 address types are 64 bits long and may be constructed in the EUI-64 format. The modified EUI-64 format interface ID is derived from a 48-bit link-layer address by inserting the hexadecimal number FFFE between the upper three bytes (OUI field) and the lower 3 bytes (serial number) of the link layer address. To ensure that the chosen address is from a unique Ethernet MAC address, the 7th bit in the high-order byte is set to 1 (equivalent to the IEEE Global/Local bit) to indicate the uniqueness of the 48-bit address.

GARP Generic Attribute Registration Protocol. GARP is a protocol that can be used by endstations and switches to register and propagate multicast group membership information in a switched environment so that multicast data frames are propagated only to those parts of a switched LAN containing registered endstations. Formerly called Group Address Registration Protocol.

GMRP Generic Multicast Registration Protocol. GMRP allows network devices to register end stations with multicast groups. GMRP requires that any participating network devices or end stations comply with the IEEE 802.1p standard.

ICMP Internet Control Message Protocol is a network layer protocol that reports errors in processing IP packets. ICMP is also used by routers to feed back information about better routing choices.

IEEE 802.1D Specifies a general method for the operation of MAC bridges, including the Spanning Tree Protocol.

IEEE 802.1Q VLAN Tagging—Defines Ethernet frame tags which carry VLAN information. It allows switches to assign endstations to different virtual LANs, and defines a standard way for VLANs to communicate across switched networks.

IEEE 802.1p An IEEE standard for providing quality of service (QoS) in Ethernet networks. The standard uses packet tags that define up to eight traffic classes and allows switches to transmit packets based on the tagged priority value.

IEEE 802.1s An IEEE standard for the Multiple Spanning Tree Protocol (MSTP) which provides independent spanning trees for VLAN groups.

IEEE 802.1w An IEEE standard for the Rapid Spanning Tree Protocol (RSTP) which reduces the convergence time for network topology changes to about 10% of that required by the older IEEE 802.1D STP standard. (Now incorporated in IEEE 802.1D-2004)

IEEE 802.1X Port Authentication controls access to the switch ports by requiring users to first enter a user ID and password for authentication.

IEEE 802.3ac Defines frame extensions for VLAN tagging.

IEEE 802.3x Defines Ethernet frame start/stop requests and timers used for flow control on full-duplex links. (Now incorporated in IEEE 802.3-2002)

IGMP Internet Group Management Protocol. A protocol through which hosts can register with their local router for multicast services. If there is more than one multicast switch/router on a given subnetwork, one of the devices is made the “querier” and assumes responsibility for keeping track of group membership.

IGMP Proxy Proxies multicast group membership information onto the upstream interface based on IGMP messages monitored on downstream interfaces, and forwards multicast traffic based on that information. There is no need for multicast routing protocols in an simple tree that uses IGMP Proxy.

IGMP Query On each subnetwork, one IGMP-capable device will act as the querier — that is, the device that asks all hosts to report on the IP multicast groups they wish to join or to which they already belong. The elected querier will be the device with the lowest IP address in the subnetwork.

IGMP Snooping Listening to IGMP Query and IGMP Report packets transferred between IP Multicast Routers and IP Multicast host groups to identify IP Multicast group members.

In-Band Management Management of the network from a station attached directly to the network.

IP Multicast Filtering A process whereby this switch can pass multicast traffic along to participating hosts.

IP Precedence The Type of Service (ToS) octet in the IPv4 header includes three precedence bits defining eight different priority levels ranging from highest priority for network control packets to lowest priority for routine traffic. The eight values are mapped one-to-one to the Class of Service categories by default, but may be configured differently to suit the requirements for specific network applications.

LACP Link Aggregation Control Protocol. Allows ports to automatically negotiate a trunked link with LACP-configured ports on another device.

Layer 2 Data Link layer in the ISO 7-Layer Data Communications Protocol. This is related directly to the hardware interface for network devices and passes on traffic based on MAC addresses.

Layer 3 Network layer in the ISO 7-Layer Data Communications Protocol. This layer handles the routing functions for data moving from one open system to another.

Link Aggregation *See Port Trunk.*

LLDP Link Layer Discovery Protocol is used to discover basic information about neighboring devices in the local broadcast domain by using periodic broadcasts to advertise information such as device identification, capabilities and configuration settings.

MD5 MD5 Message-Digest is an algorithm that is used to create digital signatures. It is intended for use with 32 bit machines and is safer than the MD4 algorithm, which has been broken. MD5 is a one-way hash function, meaning that it takes a message and converts it into a fixed string of digits, also called a message digest.

MIB Management Information Base. An acronym for Management Information Base. It is a set of database objects that contains information about a specific device.

MRD Multicast Router Discovery is a A protocol used by IGMP snooping and multicast routing devices to discover which interfaces are attached to multicast routers. This process allows IGMP-enabled devices to determine where to send multicast source and group membership messages.

MSTP Multiple Spanning Tree Protocol can provide an independent spanning tree for different VLANs. It simplifies network management, provides for even faster convergence than RSTP by limiting the size of each region, and prevents VLAN members from being segmented from the rest of the group.

Multicast Switching A process whereby the switch filters incoming multicast frames for services for which no attached host has registered, or forwards them to all ports contained within the designated multicast VLAN group.

MVR Multicast VLAN Registration is a method of using a single network-wide multicast VLAN to transmit common services, such as such as television channels or video-on-demand, across a service-provider's network. MVR simplifies the configuration of multicast services by using a common VLAN for distribution, while still preserving security and data isolation for subscribers residing in both the MVR VLAN and other standard groups.

NTP Network Time Protocol provides the mechanisms to synchronize time across the network. The time servers operate in a hierarchical-master-slave configuration in order to synchronize local clocks within the subnet and to national time standards via wire or radio.

OSPF Open Shortest Path First is a link-state routing protocol that functions better over a larger network such as the Internet, as opposed to distance-vector routing protocols such as RIP. It includes features such as unlimited hop count, authentication of routing updates, and Variable Length Subnet Masks (VLSM).

Out-of-Band Management Management of the network from a station not attached to the network.

Port Authentication *See IEEE 802.1X*.

Port Mirroring A method whereby data on a target port is mirrored to a monitor port for troubleshooting with a logic analyzer or RMON probe. This allows data on the target port to be studied unobstructively.

Port Trunk Defines a network link aggregation and trunking method which specifies how to create a single high-speed logical link that combines several lower-speed physical links.

QinQ QinQ tunneling is designed for service providers carrying traffic for multiple customers across their networks. It is used to maintain customer-specific VLAN and Layer 2 protocol configurations even when different customers use the same internal VLAN IDs.

QoS Quality of Service. QoS refers to the capability of a network to provide better service to selected traffic flows using features such as data prioritization, queuing, congestion avoidance and traffic shaping. These features effectively provide preferential treatment to specific flows either by raising the priority of one flow or limiting the priority of another flow.

RADIUS Remote Authentication Dial-in User Service. RADIUS is a logon authentication protocol that uses software running on a central server to control access to RADIUS-compliant devices on the network.

RIP Routing Information Protocol seeks to find the shortest route to another device by minimizing the distance-vector, or hop count, which serves as a rough estimate of transmission cost. RIP-2 is a compatible upgrade to RIP. It adds useful capabilities for subnet routing, authentication, and multicast transmissions.

RMON Remote Monitoring. RMON provides comprehensive network monitoring capabilities. It eliminates the polling required in standard SNMP, and can set alarms on a variety of traffic conditions, including specific error types.

RSTP Rapid Spanning Tree Protocol. RSTP reduces the convergence time for network topology changes to about 10% of that required by the older IEEE 802.1D STP standard.

SMTP Simple Mail Transfer Protocol is a standard host-to-host mail transport protocol that operates over TCP, port 25.

SNMP Simple Network Management Protocol. The application protocol in the Internet suite of protocols which offers network management services.

SNTP Simple Network Time Protocol allows a device to set its internal clock based on periodic updates from a Network Time Protocol (NTP) server. Updates can be requested from a specific NTP server, or can be received via broadcasts sent by NTP servers.

SSH Secure Shell is a secure replacement for remote access functions, including Telnet. SSH can authenticate users with a cryptographic key, and encrypt data connections between management clients and the switch.

STA Spanning Tree Algorithm is a technology that checks your network for any loops. A loop can often occur in complicated or backup linked network systems. Spanning Tree detects and directs data along the shortest available path, maximizing the performance and efficiency of the network.

TACACS+ Terminal Access Controller Access Control System Plus. TACACS+ is a logon authentication protocol that uses software running on a central server to control access to TACACS-compliant devices on the network.

TCP/IP Transmission Control Protocol/Internet Protocol. Protocol suite that includes TCP as the primary transport protocol, and IP as the network layer protocol.

Telnet Defines a remote communication facility for interfacing to a terminal device over TCP/IP.

TFTP Trivial File Transfer Protocol. A TCP/IP protocol commonly used for software downloads.

UDP User Datagram Protocol. UDP provides a datagram mode for packet-switched communications. It uses IP as the underlying transport mechanism to provide access to IP-like services. UDP packets are delivered just like IP packets – connection-less datagrams that may be discarded before reaching their targets. UDP is useful when TCP would be too complex, too slow, or just unnecessary.

UTC Universal Time Coordinate. UTC is a time scale that couples Greenwich Mean Time (based solely on the Earth's rotation rate) with highly accurate atomic time. The UTC does not have daylight saving time.

VLAN Virtual LAN. A Virtual LAN is a collection of network nodes that share the same collision domain regardless of their physical location or connection point in the network. A VLAN serves as a logical workgroup with no physical barriers, and allows users to share information and resources as though located on the same LAN.

VRRP Virtual Router Redundancy Protocol uses a virtual IP address to support a primary router and multiple backup routers. The backups can be configured to take over the workload if the master fails or to load share the traffic. The primary goal of VRRP is to allow a host device which has been configured with a fixed gateway to maintain network connectivity in case the primary gateway goes down.

XModem A protocol used to transfer files between devices. Data is grouped in 128-byte blocks and error-corrected.

Commands

aaa accounting commands 215
aaa accounting dot1x 216
aaa accounting exec 217
aaa accounting update 218
aaa authorization commands 218
aaa authorization exec 219
aaa group server 220
absolute 149
access-list arp 344
access-list ip 326
access-list ipv6 332
access-list mac 339
accounting commands 222
accounting dot1x 221
accounting exec 222
arp 649
authentication enable 204
authentication login 205
authorization commands 223
authorization exec 224
boot system 101
calendar set 147
capabilities 351
channel-group 382
class 528
class-map 524
clear access-list hardware counters 347
clear arp-cache 651
clear collision-mac-address-table 415
clear counters 357
clear dns cache 625
clear erps statistics 501
clear host 625
clear ip dhcp snooping binding 296
clear ip dhcp snooping database flash 296
clear ip igmp snooping groups dynamic 553
clear ip igmp snooping statistics 553
clear ip source-guard binding blocked 303
clear ipv6 mld snooping groups dynamic 578
clear ipv6 mld snooping statistics 579
clear ipv6 neighbors 677
clear ipv6 traffic 670
clear log 128
clear mac-address-table dynamic 415
clear network-access 274
clock summer-time (date) 142
clock summer-time (predefined) 144
clock summer-time (recurring) 145
clock timezone 146
cluster 152
cluster commander 153
cluster ip-pool 154
cluster member 155
configure 81
control-vlan 482
copy 102
databits 115
delete 106
delete public-key 238
description 525
description 352
dir 107
disable 82
disconnect 122
dos-protection echo-chargen 314
dos-protection smurf 315
dos-protection tcp-flooding 315
dos-protection tcp-null-scan 316
dos-protection tcp-syn-fin-scan 316
dos-protection tcp-xmas-scan 317
dos-protection udp-flooding 317
dos-protection win-nuke 318
dot1q-tunnel system-tunnel-control 459
dot1x default 244
dot1x intrusion-action 245
dot1x max-reauth-req 246
dot1x max-req 246
dot1x operation-mode 247
dot1x port-control 248
dot1x re-authenticate 251
dot1x re-authentication 248
dot1x system-auth-control 244
dot1x timeout auth-period 252
dot1x timeout held-period 252
dot1x timeout quiet-period 249
dot1x timeout re-authperiod 249
dot1x timeout supp-timeout 250
dot1x timeout tx-period 250
enable 483
enable 79
enable password 200
end 83

erps 481
erps clear 501
erps domain 481
erps forced-switch 502
erps manual-switch 504
exec-timeout 115
exit 83
fan-speed force-full 98
flowcontrol 353
guard-timer 484
history 354
holdoff-timer 484
hostname 86
interface 350
interface vlan 452
ip access-group 330
ip address 642
ip arp inspection 306
ip arp inspection filter 307
ip arp inspection limit 311
ip arp inspection log-buffer logs 308
ip arp inspection trust 311
ip arp inspection validate 309
ip arp inspection vlan 310
ip default-gateway 644
ip dhcp client class-id 631
ip dhcp dynamic-provision 630
ip dhcp relay server 637
ip dhcp restart client 633
ip dhcp restart relay 638
ip dhcp snooping 283
ip dhcp snooping max-number 294
ip dhcp snooping database flash 296
ip dhcp snooping information option 285
ip dhcp snooping information option circuit-id 292
ip dhcp snooping information option encode no-subtype 286
ip dhcp snooping information option remote-id 288
ip dhcp snooping information option tr101 board-id 289
ip dhcp snooping information policy 289
ip dhcp snooping trust 293
ip dhcp snooping trust 295
ip dhcp snooping verify mac-address 290
ip dhcp snooping vlan 291
ip domain-list 620
ip domain-lookup 621
ip domain-name 622
ip host 622
ip http authentication 227
ip http port 227
ip http secure-port 228
ip http secure-server 229
ip http server 228
ip igmp filter (Global Configuration) 561
ip igmp filter (Interface Configuration) 563
ip igmp max-groups 564
ip igmp max-groups action 564
ip igmp profile 561
ip igmp query-drop 565
ip igmp snooping 537
ip igmp snooping priority 538
ip igmp snooping proxy-reporting 538
ip igmp snooping querier 539
ip igmp snooping router-alert-option-check 540
ip igmp snooping router-port-expire-time 540
ip igmp snooping tcn-flood 541
ip igmp snooping tcn-query-solicit 542
ip igmp snooping unregistered-data-flood 543
ip igmp snooping unsolicited-report-interval 543
ip igmp snooping version 544
ip igmp snooping version-exclusive 545
ip igmp snooping vlan general-query-suppression 545
ip igmp snooping vlan immediate-leave 546
ip igmp snooping vlan last-memb-query-count 547
ip igmp snooping vlan last-memb-query-intvl 548
ip igmp snooping vlan mrd 548
ip igmp snooping vlan mrouter 559
ip igmp snooping vlan proxy-address 549
ip igmp snooping vlan query-interval 551
ip igmp snooping vlan query-resp-intvl 551
ip igmp snooping vlan static 552
ip mdns 627
ip multicast-data-drop 565
ip name-server 623
ip proxy-arp 650
ip route 680
ip source-guard 300
ip source-guard binding 298
ip source-guard max-binding 302
ip source-guard mode 303
ip ssh authentication-retries 236
ip ssh crypto host-key generate 239
ip ssh crypto zeroize 240
ip ssh save host-key 240
ip ssh server 236
ip ssh server-key size 237
ip ssh timeout 238
ip telnet max-sessions 231
ip telnet port 231
ip telnet server 232
ip tftp retry 111
ip tftp timeout 112
ipv6 access-group 337
ipv6 address 654
ipv6 address autoconfig 655
ipv6 address eui-64 657
ipv6 address link-local 659
ipv6 default-gateway 653

ipv6 dhcp client rapid-commit vlan 634
ipv6 dhcp restart client vlan 634
ipv6 enable 660
ipv6 host 624
ipv6 mld filter (Global Configuration) 586
ipv6 mld filter (Interface Configuration) 589
ipv6 mld max-groups 589
ipv6 mld max-groups action 590
ipv6 mld profile 587
ipv6 mld query-drop 591
ipv6 mld snooping 571
ipv6 mld snooping proxy-reporting 571
ipv6 mld snooping querier 572
ipv6 mld snooping query-interval 572
ipv6 mld snooping query-max-response-time 573
ipv6 mld snooping robustness 573
ipv6 mld snooping router-port-expire-time 574
ipv6 mld snooping unknown-multicast mode 575
ipv6 mld snooping unsolicited-report-interval 575
ipv6 mld snooping version 576
ipv6 mld snooping vlan immediate-leave 576
ipv6 mld snooping vlan mrouter 577
ipv6 mld snooping vlan static 578
ipv6 mtu 661
ipv6 nd dad attempts 673
ipv6 nd ns-interval 674
ipv6 nd reachable-time 676
jumbo frame 99
lacp 383
lacp admin-key (Ethernet Interface) 384
lacp admin-key (Port Channel) 387
lacp port-priority 385
lacp system-priority 386
lacp timeout 388
line 114
lldp 597
lldp admin-status 601
lldp basic-tlv management-ip-address 601
lldp basic-tlv port-description 602
lldp basic-tlv system-capabilities 602
lldp basic-tlv system-description 603
lldp basic-tlv system-name 603
lldp dot1-tlv proto-ident 604
lldp dot1-tlv proto-vid 604
lldp dot1-tlv pvid 605
lldp dot1-tlv vlan-name 605
lldp dot3-tlv link-agg 606
lldp dot3-tlv mac-phy 606
lldp dot3-tlv max-frame 607
lldp holdtime-multiplier 597
lldp med-fast-start-count 598
lldp med-location civic-addr 608
lldp med-notification 609
lldp med-tlv inventory 610
lldp med-tlv location 611
lldp med-tlv med-cap 611
lldp med-tlv network-policy 612
lldp notification 612
lldp notification-interval 598
lldp refresh-interval 599
lldp reinit-delay 599
lldp tx-delay 600
logging command 124
logging facility 125
logging history 125
logging host 126
logging on 127
logging sendmail 132
logging sendmail destination-email 132
logging sendmail host 133
logging sendmail level 133
logging sendmail source-email 134
logging trap 128
login 116
loopback detection trap 410
loopback-detection 408
loopback-detection action 408
loopback-detection recover-time 409
loopback-detection release 411
loopback-detection transmit-interval 410
mac access-group 342
mac-address-table aging-time 413
mac-address-table static 414
mac-authentication intrusion-action 273
mac-authentication max-mac-count 273
mac-authentication reauth-time 267
mac-learning 260
mac-vlan 469
major-domain 485
management 255
match 526
max-hops 429
media-type 354
meg-level 486
memory 180
mep-monitor 487
mst priority 429
mst vlan 430
name 431
negotiation 355
network-access aging 265
network-access dynamic-qos 268
network-access dynamic-vlan 269
network-access guest-vlan 270
network-access mac-filter 266
network-access max-mac-count 270
network-access mode mac-authentication 271
network-access port-mac-filter 272

nlm 177
no rspan session 400
node-id 488
non-erps-dev-protect 488
non-revertive 490
ntp authenticate 139
ntp authentication-key 139
ntp client 140
ntp server 141
parity 117
password 118
password-thresh 118
periodic 150
permit, deny 562
permit, deny 588
permit, deny (ARP ACL) 345
permit, deny (Extended IPv4 ACL) 327
permit, deny (Extended IPv6 ACL) 334
permit, deny (MAC ACL) 339
permit, deny (Standard IP ACL) 326
permit, deny (Standard IPv6 ACL) 333
ping 648
ping6 670
police rate 529
policy-map 527
port channel load-balance 380
port monitor 393
port security 261
power-save 376
privilege 203
process cpu 181
process cpu guard 182
prompt 77
propagate-tc 493
protocol-vlan protocol-group (Configuring Groups) 466
protocol-vlan protocol-group (Configuring Interfaces) 467
qos map cos-queue 516
qos map dscp-queue 518
qos map trust-mode 519
queue mode 512
queue weight 513
quit 80
radius-server acct-port 206
radius-server auth-port 207
radius-server host 207
radius-server key 208
radius-server retransmit 209
radius-server timeout 209
range 562
range 588
raps-def-mac 494
raps-without-vc 495
rate-limit 404
rcommand 155
reload (Global Configuration) 78
reload (Privileged Exec) 82
rename 527
revision 431
ring-port 497
rmon alarm 186
rmon collection history 188
rmon collection rmon1 189
rmon event 187
rpl neighbor 498
rpl owner 498
rspan destination 398
rspan remote vlan 399
rspan source 397
server 221
service-policy 531
set cos 530
sflow owner 193
sflow polling instance 195
sflow sampling instance 196
show access-group 347
show access-list 348
show access-list arp 346
show access-list tcam-utilization 87
show accounting 224
show arp 651
show authorization 225
show cable-diagnostics 375
show calendar 148
show class-map 531
show cluster 156
show cluster candidates 157
show cluster members 156
show collision-mac-address-table 415
show dns 626
show dns cache 626
show dos-protection 318
show dot1q-tunnel 464
show dot1x 253
show erps 505
show history 80
show hosts 627
show interfaces brief 358
show interfaces counters 359
show interfaces history 362
show interfaces protocol-vlan protocol-group 468
show interfaces status 364
show interfaces switchport 365
show interfaces transceiver 372
show interfaces transceiver-threshold 373
show ip access-group 331
show ip access-list 331
show ip arp inspection configuration 312
show ip arp inspection interface 312

show ip arp inspection log 313
show ip arp inspection statistics 313
show ip arp inspection vlan 313
show ip default-gateway 645
show ip dhcp dynamic-provision 633
show ip dhcp snooping 297
show ip dhcp snooping binding 297
show ip igmp filter 566
show ip igmp profile 567
show ip igmp query-drop 567
show ip igmp snooping 554
show ip igmp snooping group 555
show ip igmp snooping mrouter 556
show ip igmp snooping statistics 556
show ip igmp throttle interface 568
show ip interface 645
show ip mdns 628
show ip multicast-data-drop 569
show ip route 681
show ip source-guard 304
show ip source-guard binding 304
show ip ssh 241
show ip telnet 233
show ip tftp 112
show ip traffic 646
show ipv6 access-group 337
show ipv6 access-list 338
show ipv6 default-gateway 662
show ipv6 dhcp duid 636
show ipv6 dhcp vlan 636
show ipv6 interface 662
show ipv6 mld filter 591
show ipv6 mld profile 592
show ipv6 mld query-drop 592
show ipv6 mld snooping group 580
show ipv6 mld snooping group source-list 581
show ipv6 mld snooping mrouter 581
show ipv6 mld snooping statistics 582
show ipv6 mld throttle interface 593
show ipv6 mld snooping 579
show ipv6 mtu 665
show ipv6 neighbors 677
show ipv6 traffic 665
show lacp 389
show license file 88
show line 123
show lldp config 613
show lldp info local-device 614
show lldp info remote-device 615
show lldp info statistics 617
show log 129
show logging 130
show logging sendmail 135
show loopback-detection 411
show mac access-group 343
show mac access-list 343
show mac-address-table 416
show mac-address-table aging-time 417
show mac-address-table count 417
show mac-vlan 470
show management 256
show memory 89
show network-access 274
show network-access mac-address-table 275
show network-access mac-filter 276
show nlm oper-status 180
show ntp 142
show policy-map 532
show policy-map interface 533
show port monitor 394
show port security 263
show port-channel load-balance 392
show power-save 377
show privilege 203
show process cpu 89
show process cpu guard 90
show process cpu task 91
show protocol-vlan protocol-group 468
show public-key 241
show qos map cos-queue 520
show qos map dscp-queue 521
show qos map trust-mode 521
show queue mode 515
show queue weight 515
show radius-server 210
show reload 83
show rmon alarms 190
show rmon events 190
show rmon history 191
show rmon statistics 191
show rspan 401
show running-config 92
show sflow 197
show snmp 163
show snmp engine-id 174
show snmp group 175
show snmp notify-filter 180
show snmp user 176
show snmp view 177
show snmp-server enable port-traps 168
show sntp 138
show spanning-tree 445
show spanning-tree mst configuration 448
show spanning-tree tc-prop 448
show ssh 242
show startup-config 94
show system 94
show tacacs-server 213

show tech-support 95
show time-range 151
show traffic-segmentation 323
show upgrade 111
show users 96
show version 97
show vlan 457
show voice vlan 477
show watchdog 98
show web-auth 281
show web-auth interface 281
show web-auth summary 282
shutdown 356
silent-time 119
snmp-server 161
snmp-server community 161
snmp-server contact 162
snmp-server enable port-traps link-up-down 167
snmp-server enable port-traps mac-notification 168
snmp-server enable traps 164
snmp-server engine-id 169
snmp-server group 170
snmp-server host 165
snmp-server location 163
snmp-server notify-filter 178
snmp-server user 171
snmp-server view 173
sntp client 136
sntp poll 137
sntp server 137
spanning-tree 420
spanning-tree bpdu-filter 432
spanning-tree bpdu-guard 433
spanning-tree cisco-prestandard 421
spanning-tree cost 434
spanning-tree edge-port 435
spanning-tree forward-time 421
spanning-tree hello-time 422
spanning-tree link-type 436
spanning-tree loopback-detection 436
spanning-tree loopback-detection action 437
spanning-tree loopback-detection release 444
spanning-tree loopback-detection release-mode 438
spanning-tree loopback-detection trap 439
spanning-tree max-age 423
spanning-tree mode 423
spanning-tree mst configuration 425
spanning-tree mst cost 439
spanning-tree mst port-priority 440
spanning-tree pathcost method 425
spanning-tree port-bpdu-flooding 441
spanning-tree port-priority 441
spanning-tree priority 426
spanning-tree protocol-migration 445
spanning-tree root-guard 442
spanning-tree spanning-disabled 443
spanning-tree system-bpdu-flooding 427
spanning-tree tc-prop 427
spanning-tree tc-prop-stop 443
spanning-tree transmission-limit 428
speed 120
speed-duplex 356
stopbits 120
switchport acceptable-frame-types 452
switchport allowed vlan 453
switchport dot1q-tunnel mode 460
switchport dot1q-tunnel priority map 460
switchport dot1q-tunnel service match cvid 461
switchport dot1q-tunnel tpid 463
switchport ingress-filtering 454
switchport mode 455
switchport native vlan 456
switchport packet-rate 405
switchport priority default 514
switchport voice vlan 474
switchport voice vlan priority 475
switchport voice vlan rule 475
switchport voice vlan security 476
tacacs-server host 211
tacacs-server key 211
tacacs-server port 212
tacacs-server retransmit 212
tacacs-server timeout 213
telnet (client) 232
terminal 122
test cable-diagnostics 374
timeout login response 121
time-range 148
traceroute 647
traceroute6 671
traffic-segmentation 319
traffic-segmentation session 320
traffic-segmentation uplink/downlink 321
traffic-segmentation uplink-to-uplink 322
transceiver-monitor 366
transceiver-threshold current 367
transceiver-threshold rx-power 368
transceiver-threshold temperature 369
transceiver-threshold tx-power 370
transceiver-threshold voltage 371
transceiver-threshold-auto 367
upgrade opcode auto 108
upgrade opcode path 110
upgrade opcode reload 111
username 201
version 499
vlan 450
vlan database 449

voice vlan 471
voice vlan aging 472
voice vlan mac-address 473
watchdog software 98
web-auth 279
web-auth login-attempts 277
web-auth quiet-period 278
web-auth re-authenticate (IP) 280
web-auth re-authenticate (Port) 280
web-auth session-timeout 278
web-auth system-auth-control 279
whichboot 108
wtr-timer 500

Index

Numerics

802.1Q tunnel 458
- access 460
- CVID to SVID map 461
- ethernet type 463
- interface configuration 460–463
- mode selection 460
- status, configuring 459
- TPID 463
- uplink 460

802.1X
- authenticator, configuring 245–251
- global settings 244
- port authentication 243, 244
- port authentication accounting 221

A

AAA
- accounting 802.1X port settings 221
- accounting exec command privileges 217, 222, 223
- accounting exec settings 222
- accounting summary 224
- accounting update 218
- accounting, configuring 214
- authorization & accounting 214
- authorization exec settings 219
- authorization method 219
- authorization settings 219
- authorization summary 224
- RADIUS group settings 220
- TACACS+ group settings 220

acceptable frame type 452

Access Control List *See* ACL

ACL 325
- ARP 344
- IPv4 Extended 325, 327
- IPv4 Standard 325, 326
- IPv6 Extended 332, 334
- IPv6 Standard 332, 333
- MAC 338
- time range 148

address table 413
- aging time 413
- aging time, displaying 417
- aging time, setting 413

administrative users, displaying 96

ARP
- proxy 650

ARP ACL 307

ARP configuration 649

ARP inspection 305
- ACL filter 307
- additional validation criteria 309
- ARP ACL 344
- enabling globally 306
- enabling per VLAN 310
- trusted ports 311

ARP statistics 646

ATC 142

authentication
- MAC address authentication 265, 271
- MAC, configuring ports 265
- network access 265, 271
- public key 235
- web 279
- web authentication port information, displaying 281
- web authentication, configuring ports 279
- web authentication, re-authenticating address 280
- web authentication, re-authenticating ports 280
- web, configuring 279

B

BOOTP 642

BPDU
- filter 432
- flooding when STA disabled on VLAN 441
- flooding when STA globally disabled 427
- ignoring superior BPDUs 442
- selecting protocol based on message format 445
- shut down port on receipt 433

broadcast storm, threshold 405

C

cable diagnostics 374

CFM
- continuity check messages 489

class map
- description 525
- DiffServ 524

CLI

command modes 70
showing commands 68
clustering switches, management access 152
command line interface *See* CLI
committed information rate, QoS policy 529
community string 48, 161
configuration file, DHCP download reference 57
configuration files, restoring defaults 100
configuration settings
restoring 51, 100, 102
saving 51, 100, 102
configuration settings, automatic installation 57
console port, required connections 40
continuity check messages, CFM 489
CoS 519
configuring 511
enabling 519
layer 3/4 priorities 516
queue mode 512
queue weights, assigning 513
CPU
status 89
tasks, showing 91
utilization, setting trap 181
utilization, showing 89
CVLAN to SPVLAN map 461

D

Daylight Savings Time *See* summer time
default IPv4 gateway, configuration 644
default IPv6 gateway, configuration 653
default priority, ingress port 514
DHCP 642
class identifier 631
client 629, 642
client identifier 631
dynamic configuration 46
relay 637
relay service, enabling 638
DHCP snooping
information option, circuit ID 292
subtype field 286
DHCPv4 snooping 282
enabling 283
global configuration 283
information option 285, 288
information option policy 289
information option, enabling 285, 288
information option, remote ID 285
policy selection 289
remote ID 288
specifying trusted interfaces 293, 295
sub-length field 286
sub-option format 286
sub-type and sub-length, disabling 286
subtype field 286
verifying MAC addresses 290
VLAN configuration 291
DiffServ 523
binding policy to interface 531
class map 524, 528
class map, description 525
classifying QoS traffic 526
committed information rate 529
configuring 523
description 525
policy map 527
policy map, description 525
QoS policy 527
service policy 531
setting CoS for matching packets 530
DNS
default domain name 622
displaying the cache 626
domain name list 622, 624
enabling lookup 621
name server list 623
static entries, IPv4 622
static entries, IPv6 624
Domain Name Service *See* DNS
DoS protection 314
downloading software 102
automatically 108
using TFTP 102
DSA encryption 239
DSCP 519
enabling 519
dynamic addresses
clearing 415
displaying 416
Dynamic Host Configuration Protocol *See* DHCP
dynamic QoS assignment 268
dynamic VLAN assignment 269

E

edge port, STA 435
encryption
DSA 239
RSA 239
engine ID 169
ERPS
configuration guidelines 480
control VLAN 482
domain configuration 481
domain, enabling 483
global configuration 481
guard timer 484
hold-off timer 484

major domain 485
MEG level 486
node identifier 488
non-compliant device protection 488
non-ERPS device protection 488
propagate topology change 493
ring configuration 481
ring port, east interface 497
ring port, west interface 497
ring, enabling 483
RPL owner 498
secondary ring 485
status, displaying 505
wait-to-restore expire timer 508
wait-to-restore timer 500
WTR expire 508
WTR timer 500
Ethernet Ring Protection Switching *See* ERPS
event logging 124
exec command privileges, accounting 217, 222, 223
exec settings
accounting 222
authorization 219

F

FIB, description 681
firmware
displaying version 97
upgrading 102
upgrading automatically 108
upgrading with FTP or TFP 108
version, displaying 97
forwarding information base *See* FIB

G

gateway, IPv4 default 644
gateway, IPv6 default 653
general security measures 259
GNU license 687

H

hardware version, displaying 97
HTTP, web server 228
HTTPS 229
configuring 228, 229
replacing SSL certificate 102, 106
secure-site certificate 102, 106
HTTPS, secure server 229

I

IEEE 802.1D 423
IEEE 802.1s 423
IEEE 802.1w 423
IEEE 802.1X 243, 244
IGMP
filter profiles, binding to interface 563
filter profiles, configuration 561
filter, interface configuration 563–564
filter, parameters 561–564
filtering & throttling 560
filtering & throttling, enabling 561
filtering & throttling, interface configuration 563–565
filtering & throttling, status 561
filtering, configuring profile 562
filtering, creating profile 561
filtering, group range 562
filtering, interface settings 563–564
groups, displaying 555
Layer 2 535
query 539
query, enabling 539
snooping 535
snooping & query, parameters 535
snooping, configuring 535
snooping, enabling 537
snooping, immediate leave 546
IGMP snooping
configuring 535
enabling per interface 537
forwarding entries 555
immediate leave, status 546
interface attached to multicast router 556, 559
last member query count 547
last member query interval 548
proxy query address 549
proxy query interval 551
proxy query response interval 551
proxy reporting 538, 571
querier timeout 540
querier, enabling 539
router port expire time 540
static host interface 552
static multicast routing 559
static port assignment 552
static router interface 559
static router port, configuring 559
statistics, displaying 556, 582
TCN flood 541
unregistered data flooding 543
version exclusive 545
version for interface, setting 544
version, setting 544
with proxy reporting 538, 571
immediate leave, IGMP snooping 546
immediate leave, MLD snooping 576

importing user public keys 102, 106
ingress filtering 454
IP address, setting 641
IP filter, for management access 255
IP routing 679
    unicast protocols 679
IP source guard
    configuring static entries 298
    setting filter criteria 300
    setting maximum bindings 302, 303
IP statistics 646
IPv4 address
    BOOTP/DHCP 633, 642
    dynamic configuration 46
    manual configuration 43
    setting 42, 642
IPv6
    displaying neighbors 677
    duplicate address detection 673
    enabling 660
    MTU 661
    neighbor reachable time 676
    neighbor solicitation interval 674
IPv6 address
    dynamic configuration (global unicast) 655
    dynamic configuration (link-local) 47, 660
    EUI format 657
    EUI-64 setting 657
    explicit configuration 660
    global unicast 654
    link-local 656
    manual configuration (global unicast) 44, 654
    manual configuration (link-local) 44, 659
    setting 42, 654

J

jumbo frame 99

K

key
    private 233
    public 233
    user public, importing 102, 106
key pair
    host 233
    host, generating 239

L

LACP
    configuration 379
    group attributes, configuring 387
    group members, configuring 383
    local parameters 389
    partner parameters 389
    protocol message statistics 389
    protocol parameters 379
    timeout, for LACPDU 388
last member query count, IGMP snooping 547
last member query interval, IGMP snooping 548
license information, GNU 687
Link Layer Discovery Protocol *See* LLDP
link type, STA 436
LLDP 595
    device statistics details, displaying 617
    device statistics, displaying 617
    display device information 615
    displaying remote information 615
    interface attributes, configuring 601–612
    local device information, displaying 614
    message attributes 595
    message statistics 617
    remote information, displaying 615
    remote port information, displaying 615
    timing attributes, configuring 597–600
    TLV, 802.1 604–605
    TLV, 802.3 606–607
    TLV, basic 601–603
    TLV, management address 601
    TLV, port description 602
    TLV, system capabilities 602
    TLV, system description 603
    TLV, system name 603
LLDP-MED 595
    notification, status 609
    TLV 595
    TLV, inventory 610
    TLV, location 608, 611
    TLV, MED capabilities 611
    TLV, network policy 612
local engine ID 169
logging
    messages, displaying 129
    syslog traps 128
    to syslog servers 126
logon authentication 199
    encryption keys 208, 211
    RADIUS client 206
    RADIUS server 206
    sequence 204, 205
    settings 205
    TACACS+ client 210
    TACACS+ server 210
loopback detection
    non-STA 407
    STA 436

M

MAC address authentication 265
  ports, configuring 265, 271
  reauthentication 267
MAC address, mirroring 393
management access, filtering per address 255
management access, IP filter 255
matching class settings, classifying QoS traffic 526
mDNS
  domain name list 627
  enabling lookup 627
  multicast name service 627
  name server list 627
media-type 354
memory
  status 89
  utilization, showing 89
memory utilization, setting trap 180
mirror port
  configuring 393
  configuring local traffic 393
  configuring remote traffic 395
MLD
  filter profiles, configuration 587
  filtering & throttling 586
  filtering & throttling, configuring profile 588
  filtering & throttling, creating profile 587
  filtering & throttling, enabling 586
  filtering & throttling, interface configuration 589–590
  filtering & throttling, status 586
MLD snooping 569
  configuring 570
  enabling 571
  immediate leave 576
  immediate leave, status 576
  multicast static router port 577
  querier 572
  querier, enabling 572
  query interval 572
  query, maximum response time 573
  robustness value 573
  static port assignment 578
  static router port 577
  unknown multicast, handling 575
  version 576
MSTP 423
  global settings, configuring 419
  global settings, displaying 446
  interface settings, configuring 420, 432–443
  interface settings, displaying 445
  path cost 439
MTU for IPv6 661
Multicast Domain Name Service *See* mDNS
multicast filtering 535
  enabling IGMP snooping 537
  enabling IGMP snooping per interface 537
  enabling MLD snooping 571
  router configuration 559
multicast groups 555
  static 552, 555
Multicast Listener Discovery *See* MLD snooping
multicast router discovery 548
multicast router port, displaying 556
multicast services
  configuring 552
  displaying 555
multicast static router port 559
  configuring 559
  configuring for MLD snooping 577
multicast storm, threshold 405
multicast, filtering and throttling 561, 586

N

network access
  authentication 265
  dynamic QoS assignment 268
  dynamic VLAN assignment 269
  MAC address filter 266
  port configuration 271
  reauthentication 267
  secure MAC information 275, 276
NTP
  authentication keys, specifying 139
  client, enabling 140
  specifying servers 141
NTP, setting the system clock 139–142

P

password, line 118
passwords 41, 200
  administrator setting 201
path cost 434
  method 425
  STA 425, 434
policy map
  description 525
  DiffServ 527
port authentication 243, 244
port priority
  configuring 511
  default ingress 514
  STA 441
port security, configuring 260
port, statistics 359
ports
  autonegotiation 355
  broadcast storm threshold 405

capabilities 351
configuring 349
duplex mode 356
flow control 353
forced selection of media type 354
forced selection on combo ports 354
mirroring 393
mirroring local traffic 393
mirroring remote traffic 395
multicast storm threshold 405
speed 356
statistics 359
unknown unicast storm threshold 405
power savings
configuring 376
enabling per port 376
priority, default port ingress 514
private key 233
privilege level, defining per command 203
problems, troubleshooting 685
protocol migration 445
protocol VLANs 465
configuring 466, 467
interface configuration 467
system configuration 466
proxy ARP 650
proxy query address, IGMP snooping 549
proxy query interval, IGMP snooping 551
proxy query response interval, IGMP snooping 551
proxy reporting, IGMP snooping 538, 571
public key 233
PVID, port native VLAN 456

Q

QoS 523
configuration guidelines 523
configuring 523
dynamic assignment 268
matching class settings 526
selecting DSCP, CoS 519
QoS policy, committed information rate 529
queue weight, assigning to CoS 513

R

RADIUS
logon authentication 206
settings 206
rate limit
port 404
setting 403
remote engine ID 169
remote logging 128
Remote Monitoring *See* RMON
rename, DiffServ 527
restarting the system 78, 82
at scheduled times 78
showing restart time 83
RMON 185
alarm, displaying settings 190
alarm, setting thresholds 186
commands 185
event settings, displaying 190
response to alarm setting 187
statistics history, collection 188
statistics history, displaying 191
statistics, collection 189
statistics, displaying 191
routing nformation base, description 681
routing table, displaying 681
RSA encryption 239
RSTP 423
global settings, configuring 423
global settings, displaying 445
interface settings, configuring 432–443
interface settings, displaying 445
running configuration files, displaying 92

S

secure shell 233
configuration 234
security, general measures 259
serial port, configuring 113
sFlow
destination for traffic 193
destination, IPv6 194
destination, UDP port 194
flow configuration 193–197
initiating 196
maximum datagram size 194
owner 193
polling period 195
samping period 196
timeout 193
version 194
SMTP
event handling 131
sending log events 131
SNMP 159
community string 161
enabling traps 164
enabling traps, mac-address changes 168
filtering IP addresses 255
global settings, configuring 161–173
mac address traps 164, 168
trap manager 165
SNMPv3 169–171
engine ID 169

engine identifier, local 169
engine identifier, remote 169
groups 170
local users, configuring 171
remote users, configuring 171
user configuration 171
views 173
SNTP
setting the system clock 136–138
specifying servers 137
software
displaying version 97
downloading 102
version, displaying 97
SSH 233
authentication retries 236
configuring 234
downloading public keys for clients 102, 106
generating host key pair 239
server, configuring 236
timeout 238
STA 419
BPDU filter 432
BPDU flooding 441
BPDU shutdown 433
cisco-prestandard, setting compatibility 421
detecting loopbacks 436
edge port 435
global settings, configuring 420–428
global settings, displaying 445
interface settings, configuring 432–443
interface settings, displaying 446
link type 436
loopback detection 436
MSTP interface settings, configuring 429–431
MSTP path cost 439
path cost 425, 434
path cost method 425
port priority 441
port/trunk loopback detection 436
protocol migration 445
transmission limit 428
startup files
creating 102
displaying 94, 108
setting 101
static addresses, setting 414
static routes, configuring 680
statistics
ARP 646
ICMP 646
IP 646
TCP 646
UDP 646
statistics, port 359
STP 423
Also see STA
summary, accounting 224
summer time, setting 142–145
switch clustering, for management 151
switch settings
restoring 100
saving 100
system clock
setting 135
setting manually 147
setting the time zone 146
setting with NTP 139–142
setting with SNTP 136–138
summer time 142–145
system clock, setting 59
system logs 127
system software, downloading from server 102

T

TACACS+
logon authentication 210
settings 210
TCN
flood 541
general query solicitation 542
Telnet
configuring 230
server, enabling 232
terminal, configuration settings 122
TFTP
retry count 111
timeout 112
time range, ACL 148
time zone, setting 146
time, setting 135
TPID 463
traffic segmentation 319
assigning ports 321
enabling 319
sessions, assigning ports 321
sessions, creating 320
transceiver thresholds
displaying 373
trap manager 49, 165
troubleshooting 685
trunk
configuration 379
LACP 379, 383
load balancing 380
static 382

U

unicast routing 679
unknown unicast storm, threshold 405
unregistered data flooding, IGMP snooping 543
upgrading software 102, 108
user account 200, 201
user password 200, 201

V

VLANs 449–477
- 802.1Q tunnel mode 460
- acceptable frame type 452
- adding static members 453
- creating 450
- displaying port members 457
- dynamic assignment 269
- egress mode 455
- ingress filtering 454
- interface configuration 452–456
- MAC-based 469
- mirroring 393
- port members, displaying 457
- protocol 465
- protocol, configuring 466, 467
- protocol, configuring groups 466
- protocol, interface configuration 467
- protocol, system configuration 466
- PVID 456
- voice 471

voice VLANs 471
- detecting VoIP devices 471
- enabling for ports 474–475
- identifying client devices 473

VoIP traffic 471
- ports, configuring 474–475
- telephony OUI, configuring 473
- voice VLAN, configuring 471

VoIP, detecting devices 475

W

web authentication 279
- address, re-authenticating 280
- configuring 279
- configuring ports 279
- port information, displaying 281
- ports, configuring 279
- ports, re-authenticating 280